Complete Axiom System of Cluster Algebra

Kosuke Fukui and Koji Nakazawa
Nagoya University

International Workshop on Confluence

Oxford. 7 July 2018

Background

We need to compress huge tree data such as XML document.

→ DAG expression

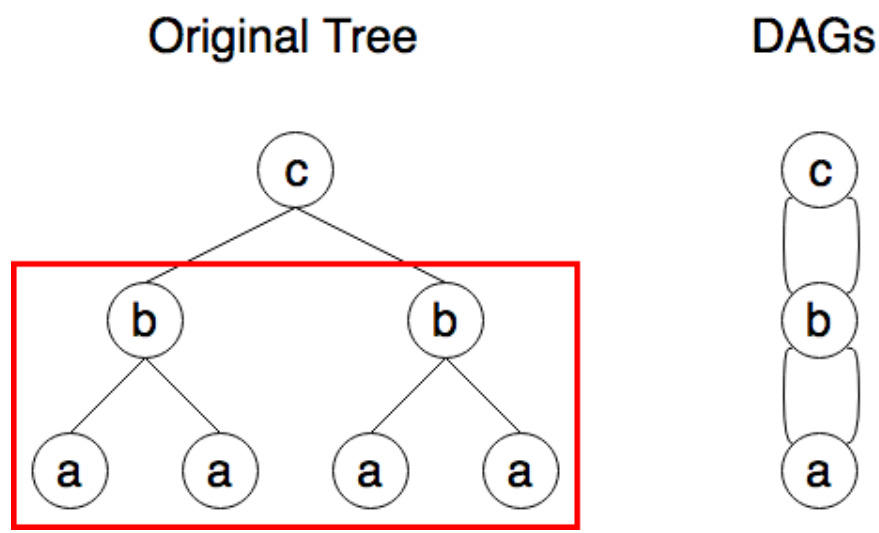

Common Subtree

Top-tree DAG

- Some trees cannot be shared as subtrees in DAGs
  Top-tree DAG [P.Bille+ 15]

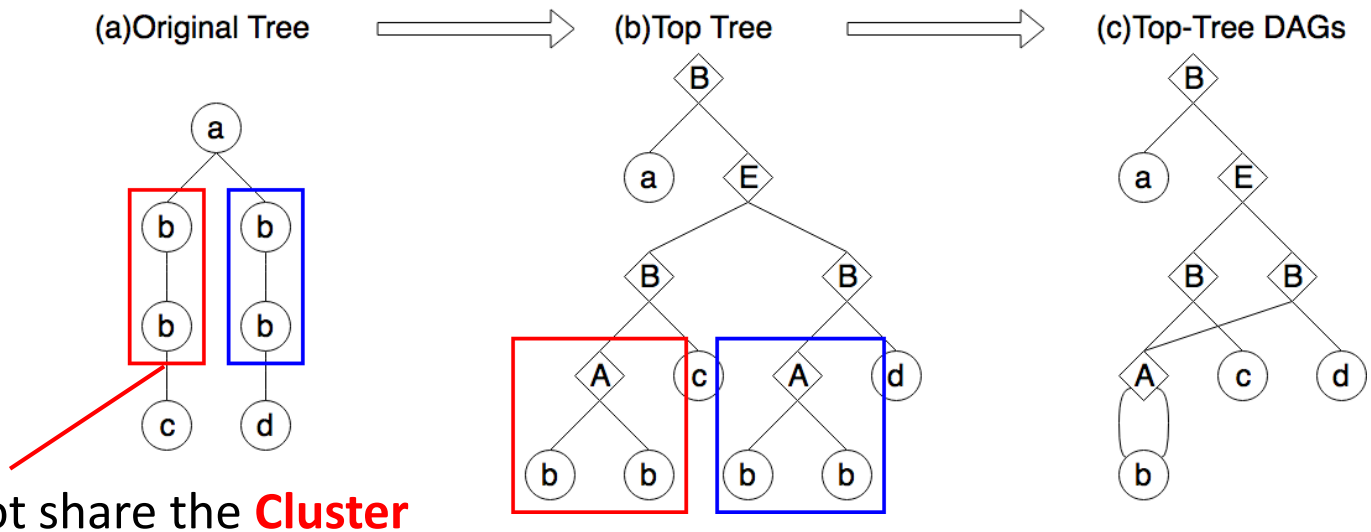

Cannot share the **Cluster**
(Intermediate structure)

Common Cluster

- By top-tree DAG, some benchmark XML documents can be compressed in 3~27% [Nishimura+ 16]

Instability of top tree

- Some cluster can be represented by several different top trees.

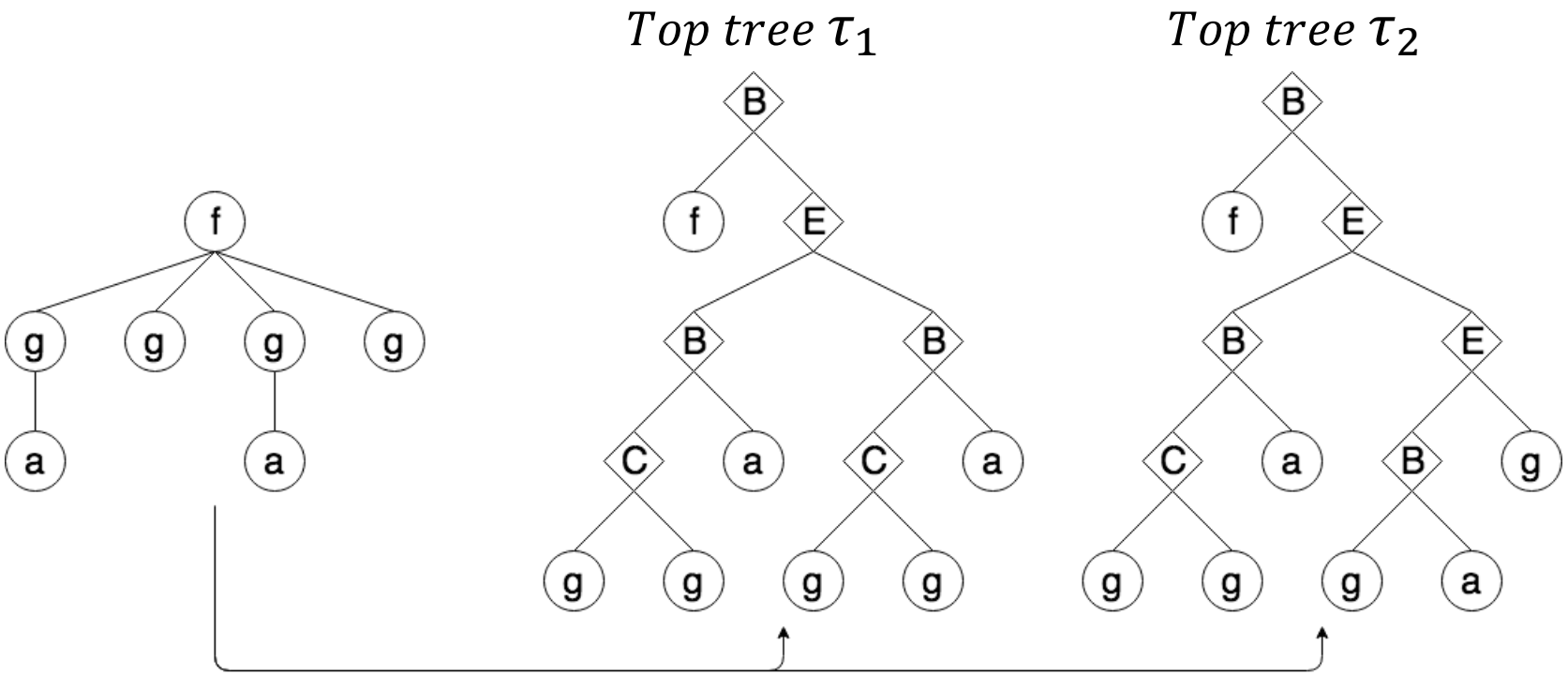

Represent top tree

Compression rate

Top tree τ_1 top-tree DAG

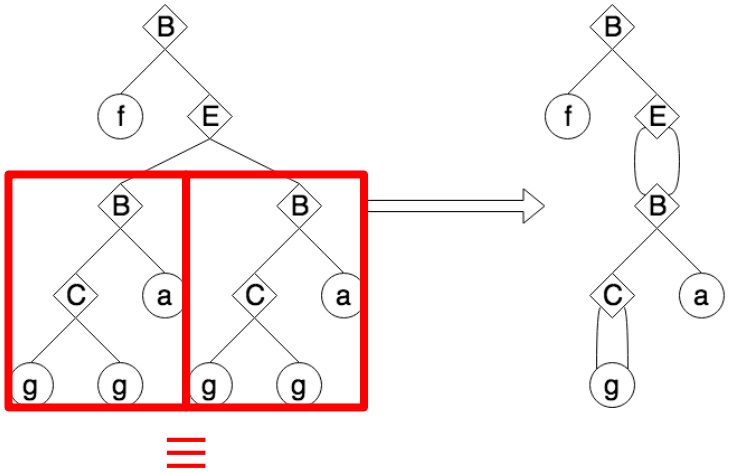

Higher compression rate

Top tree τ_2 top-tree DAG

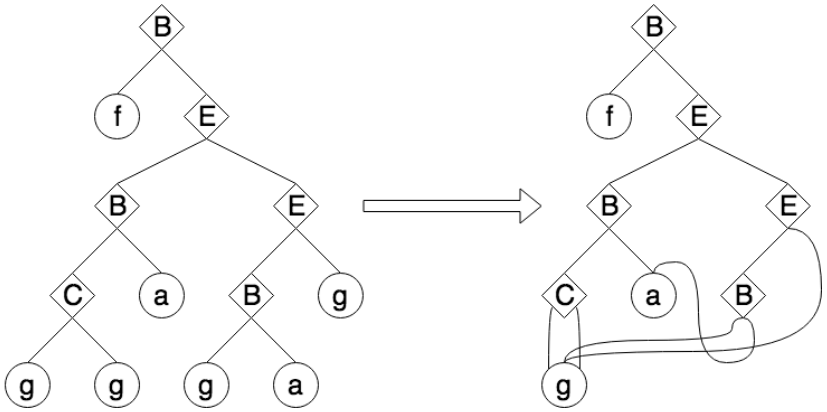

Lower compression rate

- Compression rate depends on top-tree representation.

For higher compression rate

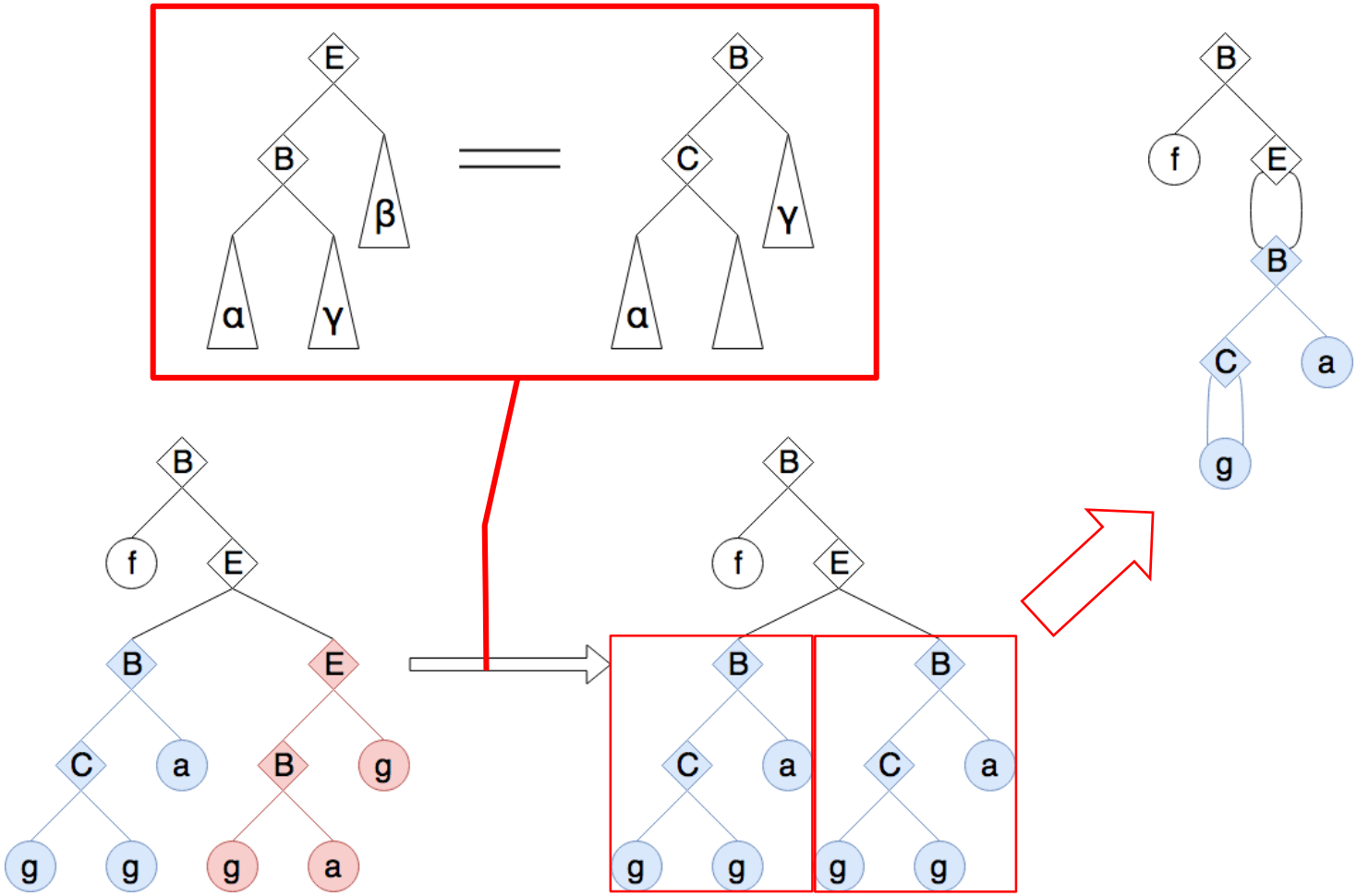

- By equivalence check, compression rate can get higher.

This work

・Goal

・ Transformation and equivalence check of top trees for higher compression rate by the top-tree DAGs.

・This work

・ Axiom system for top-tree equivalence for theoretical foundation.

Outline

- Definition of top tree
- Axiom system
- Completeness
- Conclusion

Constructing top tree

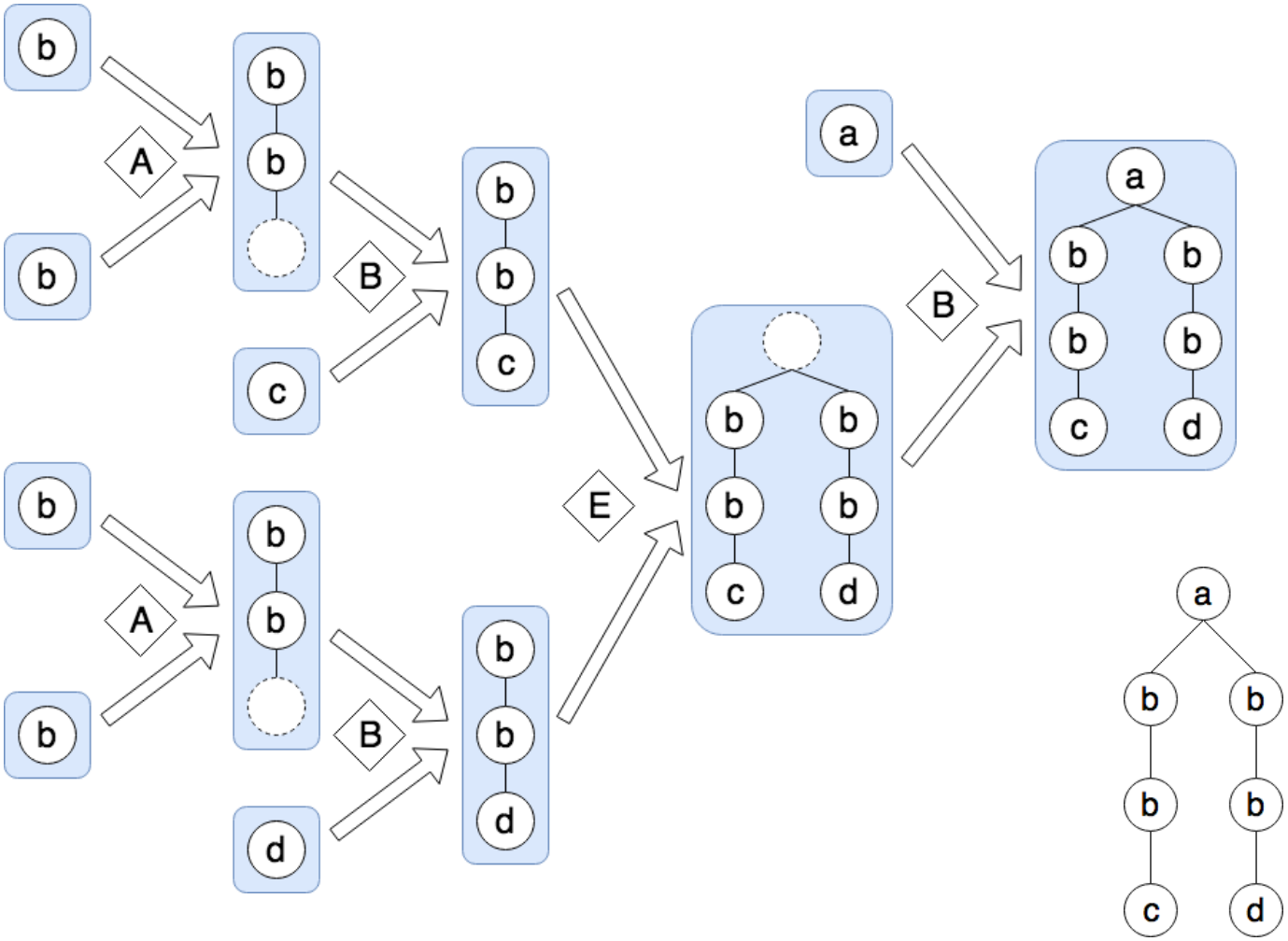

Constructing top tree

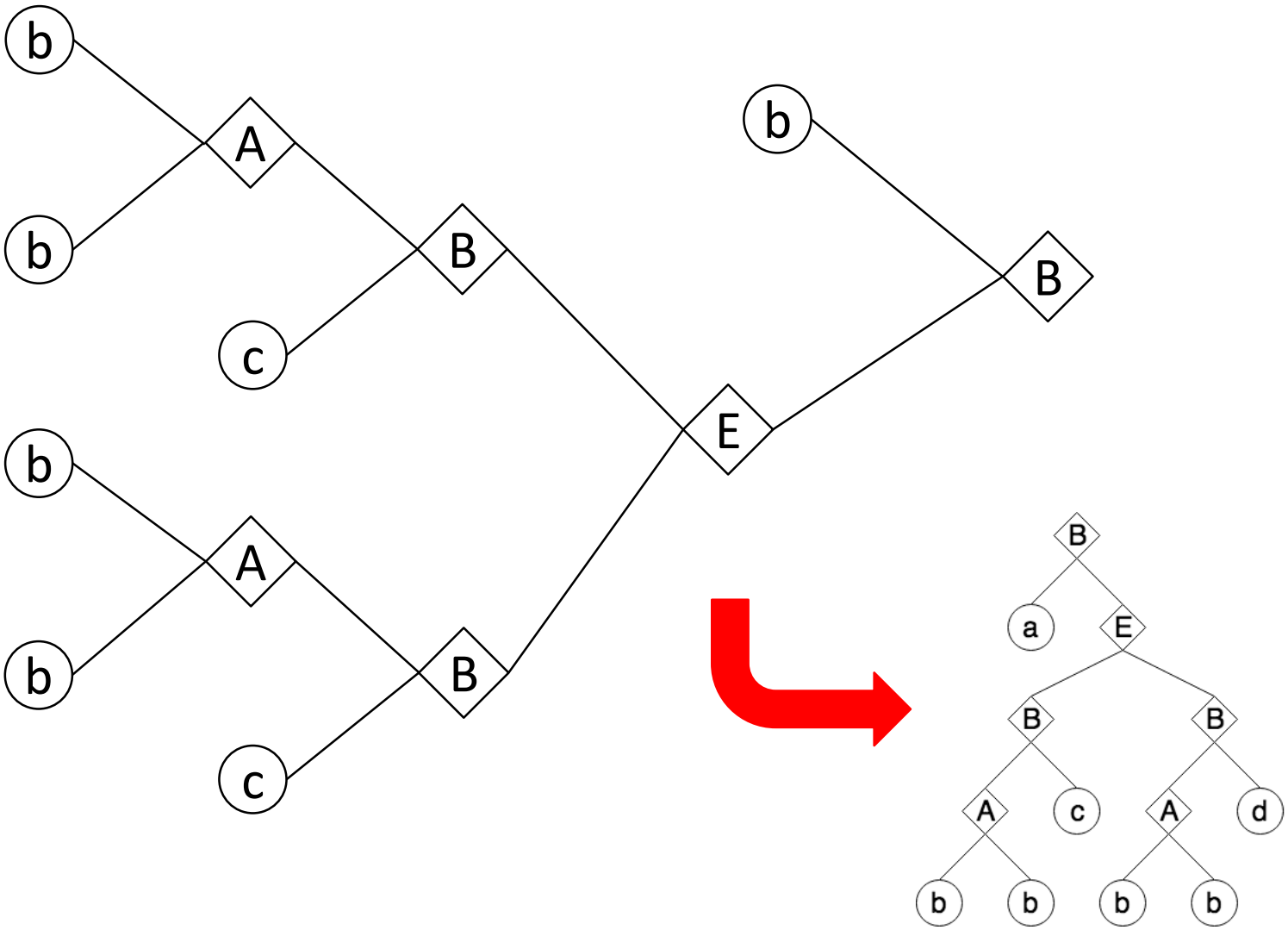

Definition of top tree

- Top Tree: The tree representing the order of construction of original tree

  ◌ : a distinguished leaf node

Five types of merging clusters

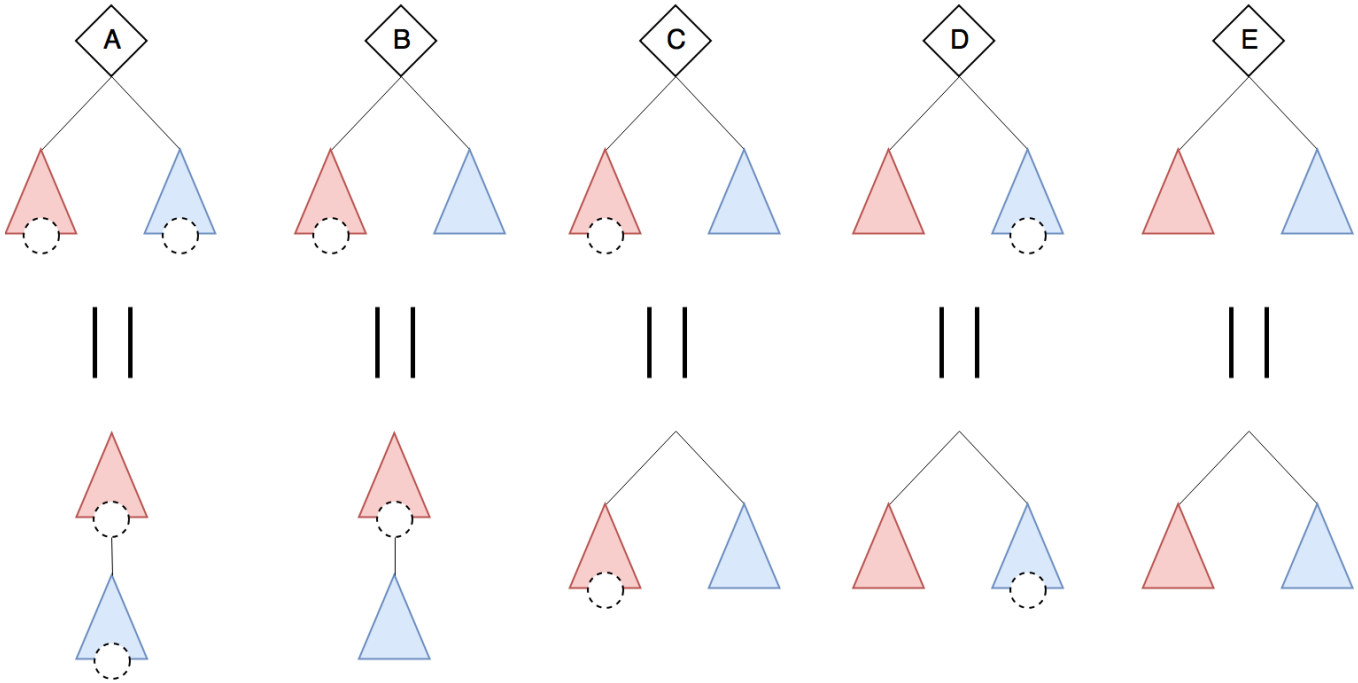

Vertical merge

- A and B is merging sub-tree vertically

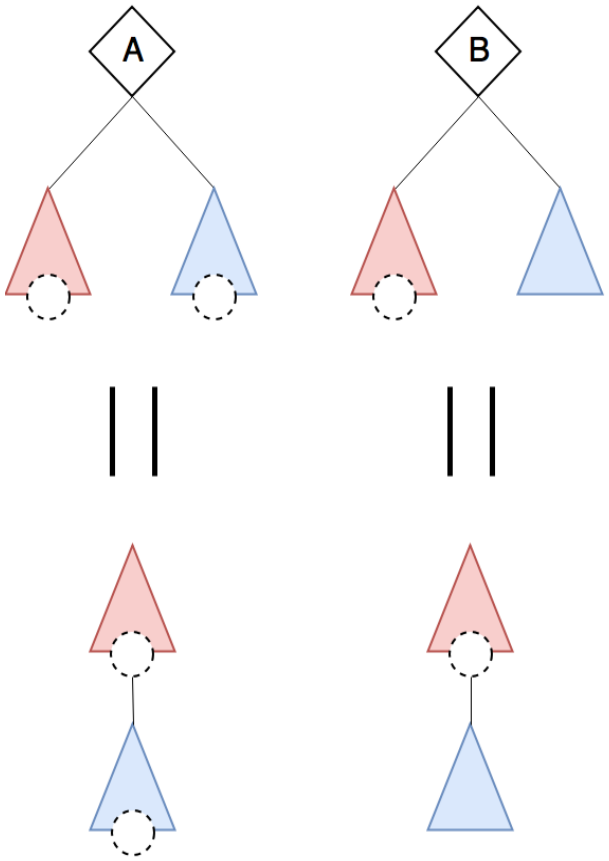

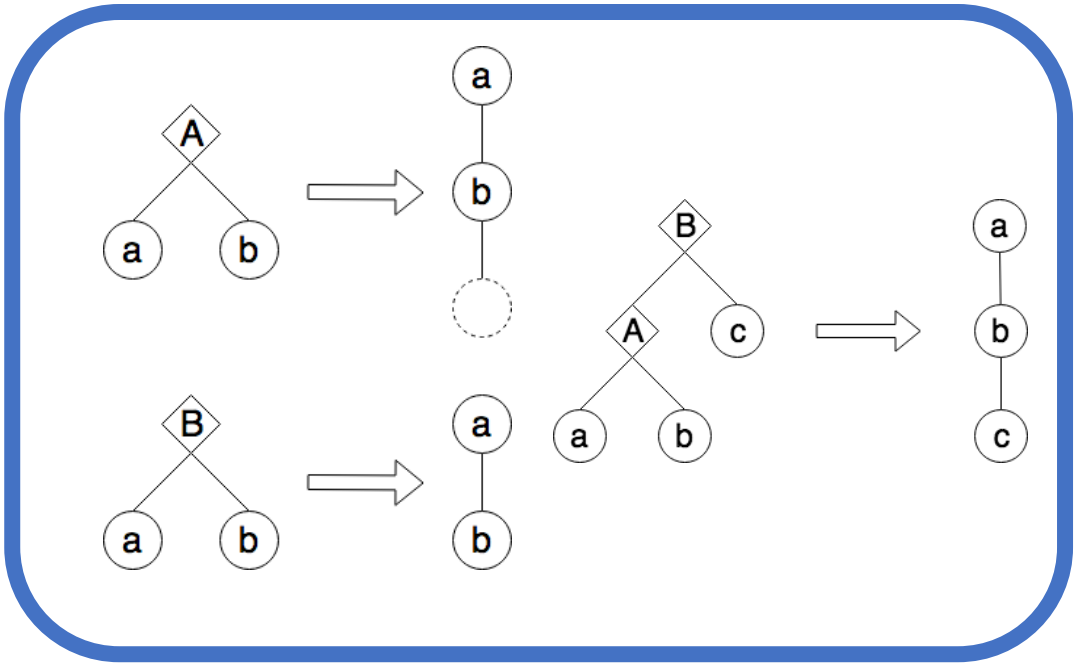

Horizontal merge

- C, D and E is merging sub-tree horizontally

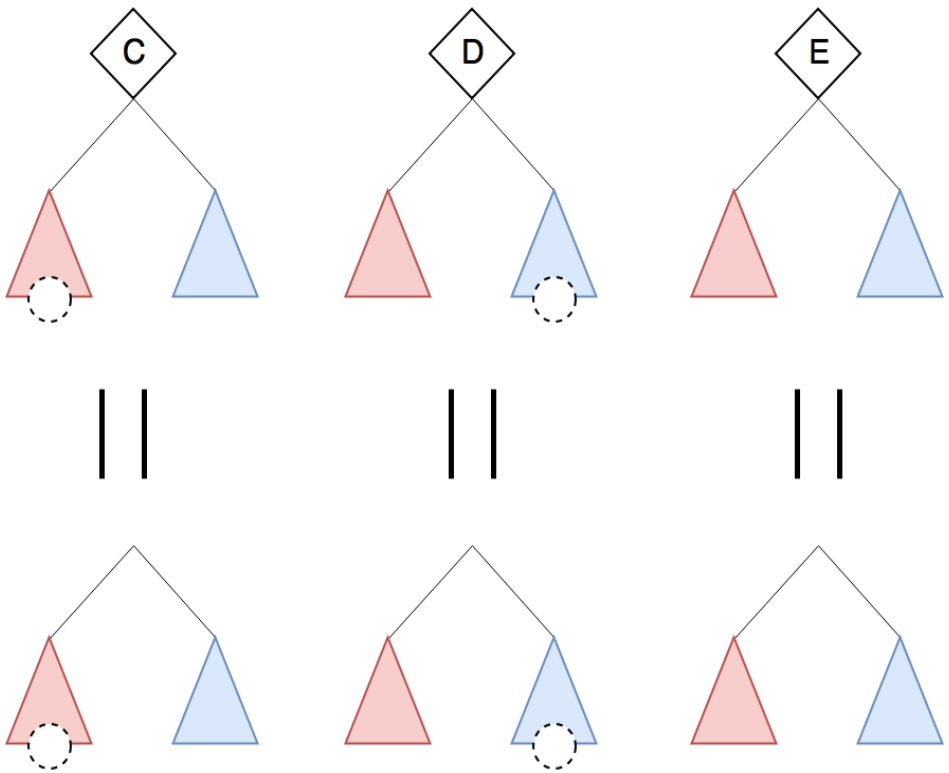

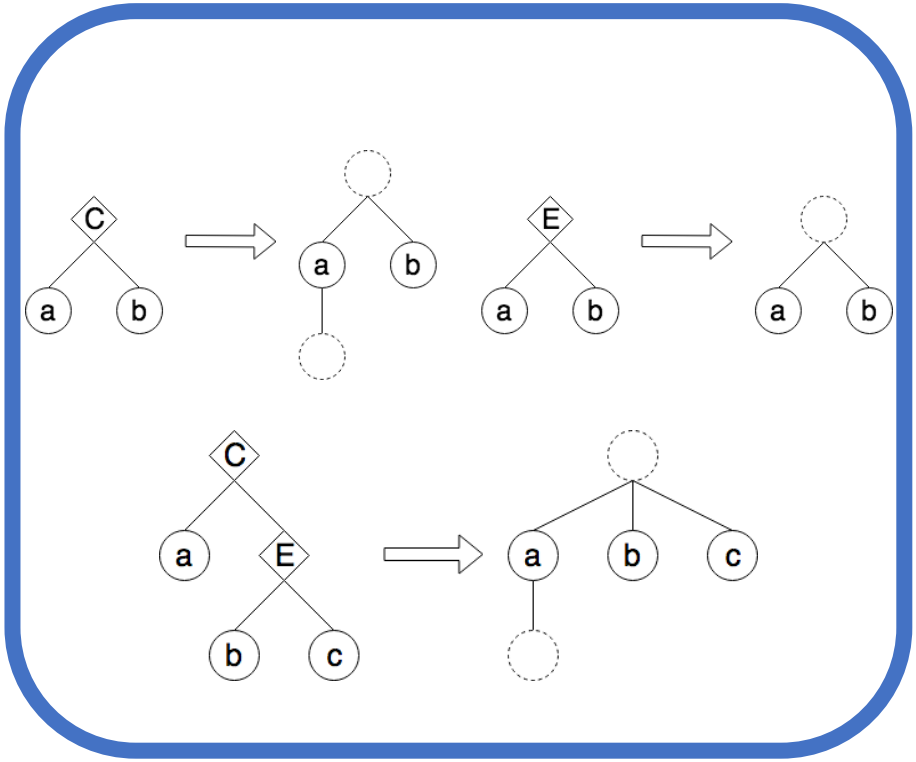

Equivalence

For top trees τ_1 and τ_2, they are equivalent if they represent the same original tree.
And we write $\vDash \tau_1 = \tau_2$.

- Mapping T

Mapping from the top trees to the cluster.

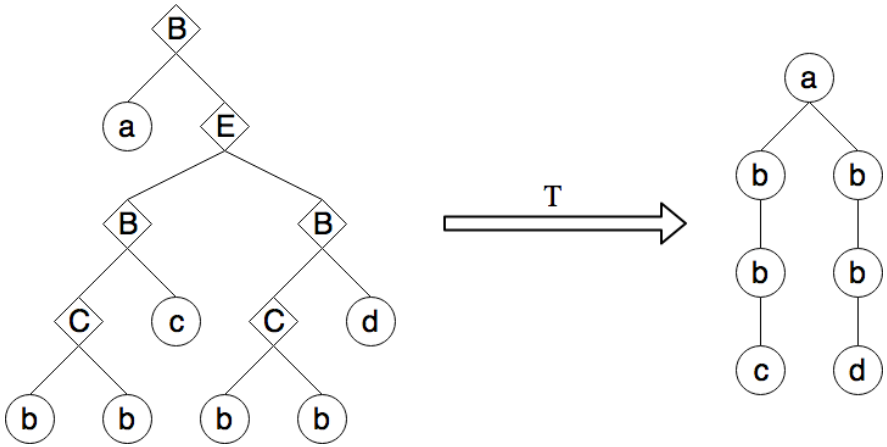

(i) top tree τ $\qquad$ (ii) original tree $T(\tau)$

$$\vDash \tau_1 = \tau_2 \overset{\text{def.}}{\Leftrightarrow} \mathrm{T}(\tau_1) \equiv \mathrm{T}(\tau_2)$$

Outline

- Definition of top tree
- Axiom system
- Completeness
- Conclusion

Axioms of cluster algebra

A_{CA}

$$(\alpha\, C\, \beta) B\, \gamma = (\alpha\, B\, \gamma) E\, \beta \qquad (\alpha\, C\, \beta) C\, \gamma = \alpha\, C\, (\beta\, E\, \gamma)$$

$$(\alpha\, C\, \beta)\, A\, \gamma = (\alpha\, A\, \gamma)\, C\, \beta \qquad (\alpha\, D\, \beta)\, C\, \gamma = \alpha\, D\, (\beta\, C\, \gamma)$$

$$(\alpha\, D\, \beta)\, B\, \gamma = \alpha\, E\, (\beta\, B\, \gamma) \qquad (\alpha\, E\, \beta)\, D\, \gamma = \alpha\, D\, (\beta\, D\, \gamma)$$

$$(\alpha\, D\, \beta)\, A\, \gamma = \alpha\, D\, (\beta\, A\, \gamma) \qquad (\alpha\, A\, \beta)\, B\, \gamma = \alpha\, B\, (\beta\, B\, \gamma)$$

$$(\alpha\, E\, \beta)\, E\, \gamma = \alpha\, E\, (\beta\, E\, \gamma) \qquad (\alpha\, A\, \beta)\, A\, \gamma = \alpha\, A\, (\beta\, A\, \gamma)$$

Derivability

- Inference rules

$$\frac{\tau_1 = \tau_2 \text{ is an axiom}}{\vdash \tau_1 = \tau_2}\ (AX) \qquad \frac{}{\vdash \tau_1 = \tau_2}\ (REF)$$

$$\frac{\vdash \tau_2 = \tau_1}{\vdash \tau_1 = \tau_2}\ (SYM) \qquad \frac{\vdash \tau_1 = \tau_2 \quad \vdash \tau_2 = \tau_3}{\vdash \tau_1 = \tau_3}\ (TR)$$

$$\frac{\vdash \tau_1 = \tau_2}{\vdash \tau_1\ X\ \tau = \vdash \tau_2\ X\ \tau}\ (COML) \qquad \frac{\vdash \tau_1 = \tau_2}{\vdash \tau\ X\ \tau_1 = \vdash \tau\ X\ \tau_2}\ (COMR)$$

$$(X = A, B, C, D \text{ or } E)$$

For top trees τ_1 and τ_2, if they are derivable by the inference rules, we write $\vdash_{A_{CA}} \tau_1 = \tau_2$.

Outline

- Definition of top tree
- Axiom system
- Completeness
- Conclusion

Soundness and Completeness

For top trees τ_1 and τ_2,

- Soundness

$$\vdash_{A_{CA}} \tau_1 = \tau_2 \Rightarrow \vDash \tau_1 = \tau_2$$

- Completeness

$$\vDash \tau_1 = \tau_2 \Rightarrow \vdash_{A_{CA}} \tau_1 = \tau_2$$

Soundness

- **Theorem** (Soundness of A_{CA})

  For top trees τ_1 and τ_2, If $\vdash_{A_{CA}} \tau_1 = \tau_2$ then $\vDash \tau_1 = \tau_2$

Proof. By induction on $\vdash_{A_{CA}} \tau_1 = \tau_2$

$$(\alpha\ C\ \beta)\ B\ \gamma\ =\ (\alpha\ B\ \gamma)\ E\ \beta$$

$(\alpha\ C\ \beta)\ B\ \gamma$ $\qquad\qquad$ $(\alpha\ B\ \gamma)\ E\ \beta$

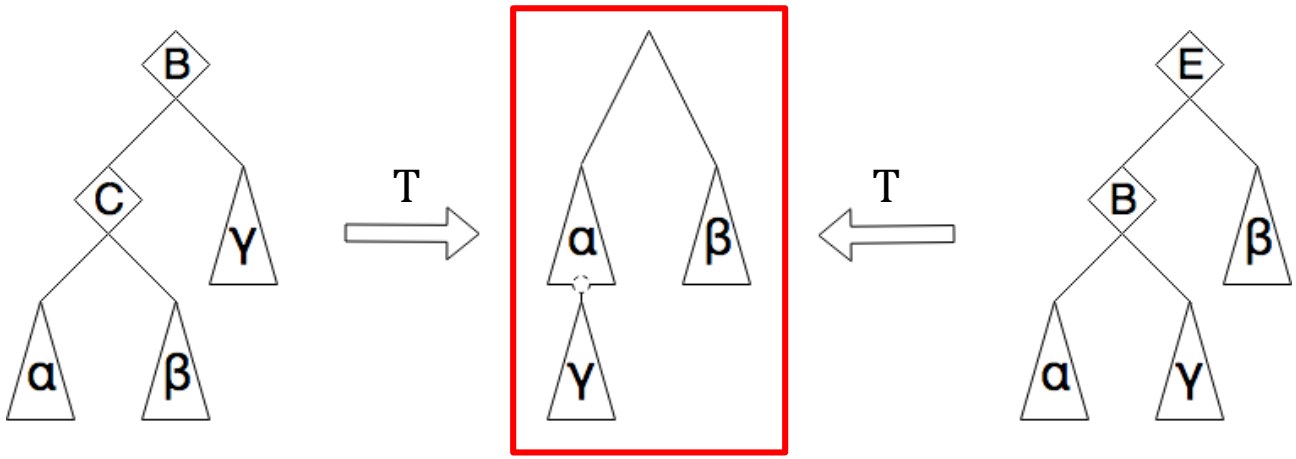

They represent the same tree

Completeness

- **Theorem** (Completeness of A_{CA})

For two top trees τ_1 and τ_2, if $\vDash \tau_1 = \tau_2$,
then we have $\vdash_{A_{CA}} \tau_1 = \tau_2$

(proof idea)

Give a reduction rules of cluster algebra and prove its SN and UNF

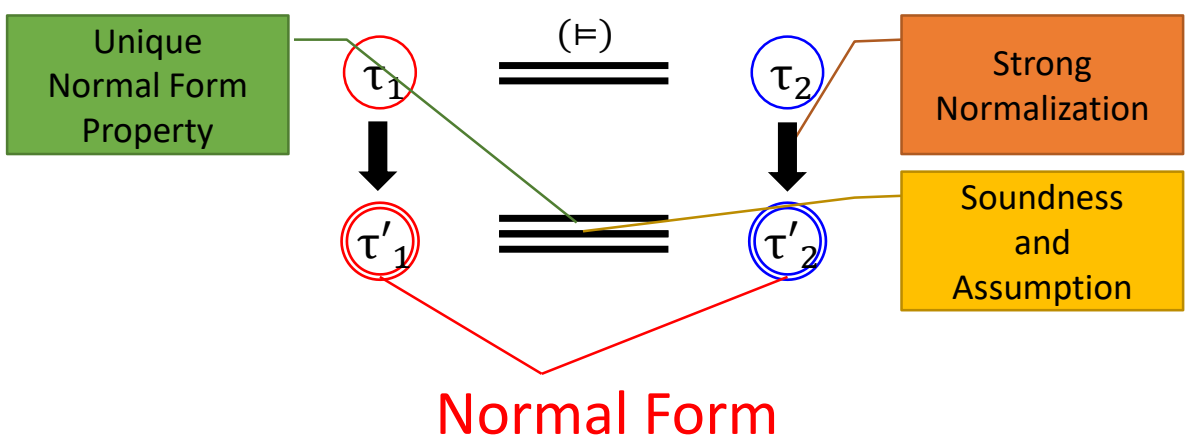

Reduction system

Orienting from left to right for each axiom.

$$
\begin{aligned}
(\alpha\ C\ \beta)B\ \gamma &= (\alpha\ B\ \gamma)E\ \beta \\
(\alpha\ D\ \beta)B\ \gamma &= \alpha\ E\ (\beta\ B\ \gamma) \\
(\alpha\ A\ \beta)B\ \gamma &= \alpha\ B\ (\beta\ B\ \gamma) \\
(\alpha\ E\ \beta)\ E\ \gamma &= \alpha\ E\ (\beta\ E\ \gamma) \\
&\vdots
\end{aligned}
$$

$$
\begin{aligned}
(\alpha\ C\ \beta)\ B\ \gamma &\rightarrow (\alpha\ B\ \gamma)\ E\ \beta \\
(\alpha\ D\ \beta)\ B\ \gamma &\rightarrow \alpha\ E\ (\beta\ B\ \gamma) \\
(\alpha\ A\ \beta)\ B\ \gamma &\rightarrow \alpha\ B\ (\beta\ B\ \gamma) \\
(\alpha\ E\ \beta)\ E\ \gamma &\rightarrow \alpha\ E\ (\beta\ E\ \gamma) \\
&\vdots
\end{aligned}
$$

Axioms **Reduction rules**

V-merge and H merge

$$V = A \text{ or } B \qquad H = \{C, D \text{ or } E\}$$

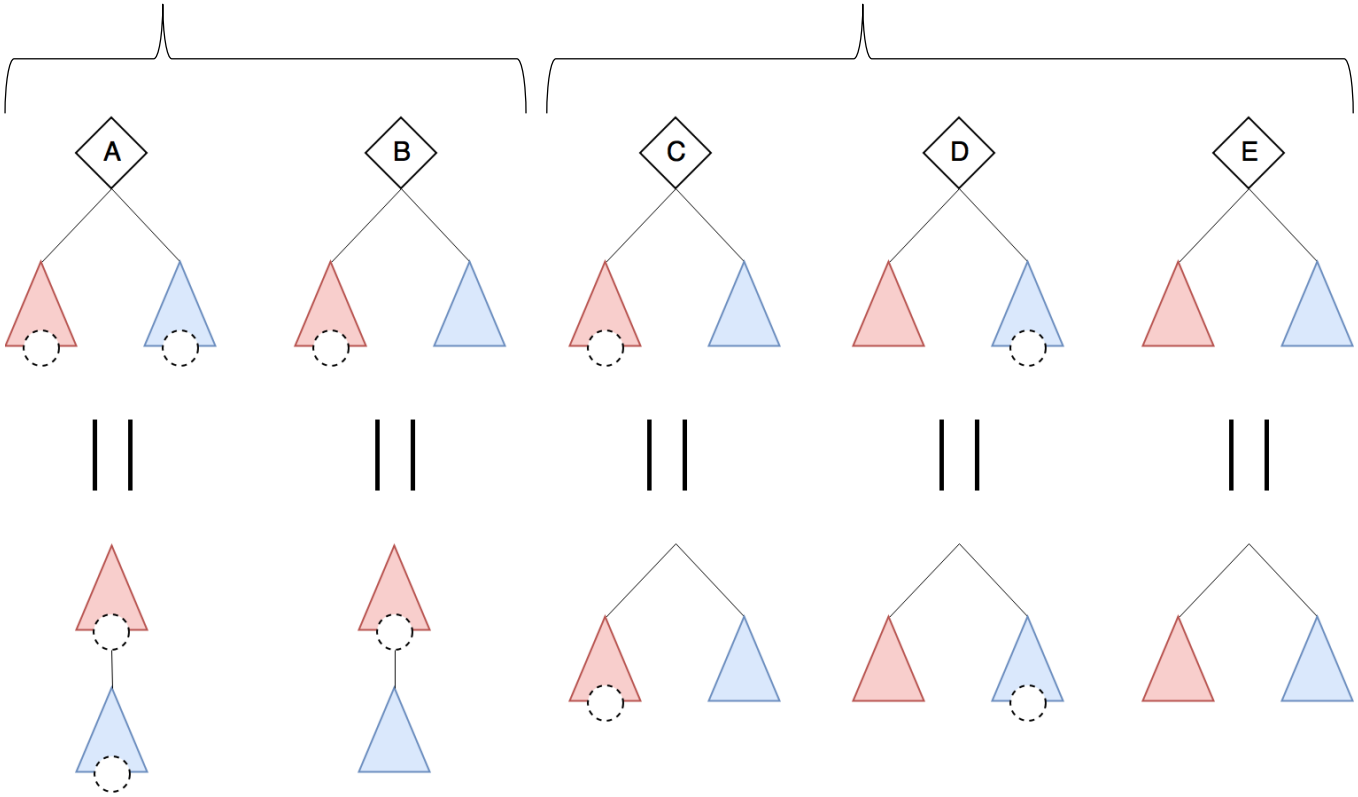

Strong Normalization

Proposition (Strong Normalization)
The reduction system is strongly normalizable.

proof. Defining the following three measures.

$$w(\tau) = the\ number\ of\ H\ in\ the\ left\ subtree\ of\ V$$
$$d_V(\tau) = the\ number\ of\ V\ in\ the\ left\ subtree\ of\ V$$
$$d_H(\tau) = the\ number\ of\ H\ in\ the\ left\ subtree\ of\ H$$

$$\tau \to \tau' \Rightarrow \big(w(\tau), d_V(\tau) + d_H(\tau)\big) > \big(w(\tau'), d_V(\tau') + d_H(\tau')\big)$$

w.r.t. lexicographic order.

SN is also checked by some tools such as TTT2, APROVE etc...

Normal Form

Normal form consists only of the merge type of (B) and (E) and has the shape that slopes down to the right.
Normal form is similar to original tree structurally.

- Mapping Θ

Mapping from the cluster to the normal form.
By this mapping, normal form is constructed from node to root.

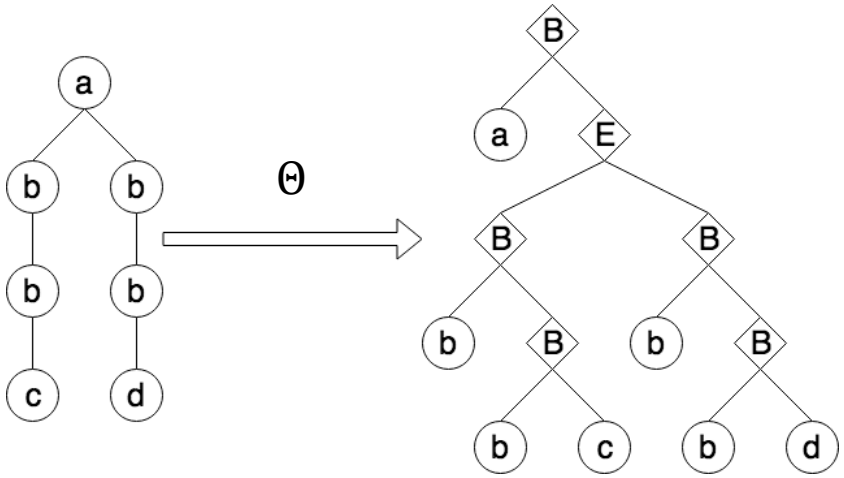

(i) cluster τ (ii) normal $form$ Θ(τ)

Clusters and normal forms

- **Proposition** (Correspondence)

For any normal form τ, we have $\Theta\big(T(\tau)\big) \equiv \tau$, in particular.

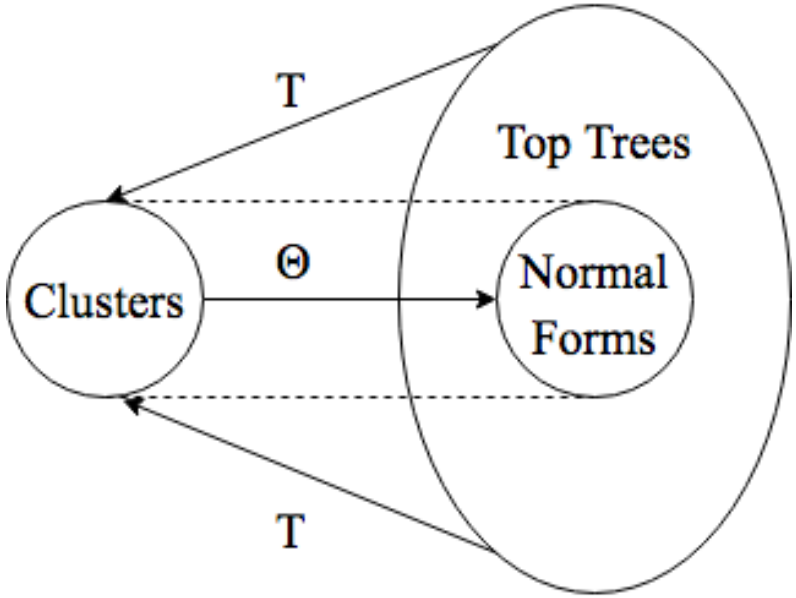

Clusters and normal-form top trees

Unique Normal Form Property

- **Proposition** (Unique normal form property)

  For two normal forms τ_1 and τ_2,
  if $\vDash \tau_1 = \tau_2$, then we have $\tau_1 \equiv \tau_2$

proof.

$$\vDash \tau_1 = \tau_2 \quad \Leftrightarrow \quad \mathrm{T}(\tau_1) \equiv \mathrm{T}(\tau_2)$$

By Correspondence,

$$\Theta\big(\mathrm{T}(\tau_1)\big) \equiv \Theta\big(\mathrm{T}(\tau_2)\big)$$
$$\rightarrow \tau_1 \equiv \tau_2$$

Confluence is also checked by some tools such as
ACP, Coll/saigawa, CSI etc ...

Completeness

- **Theorem** (Completeness)

  For two top trees τ_1 and τ_2, if $\vDash \tau_1 = \tau_2$, then we have $\vdash_{A_{CA}} \tau_1 = \tau_2$

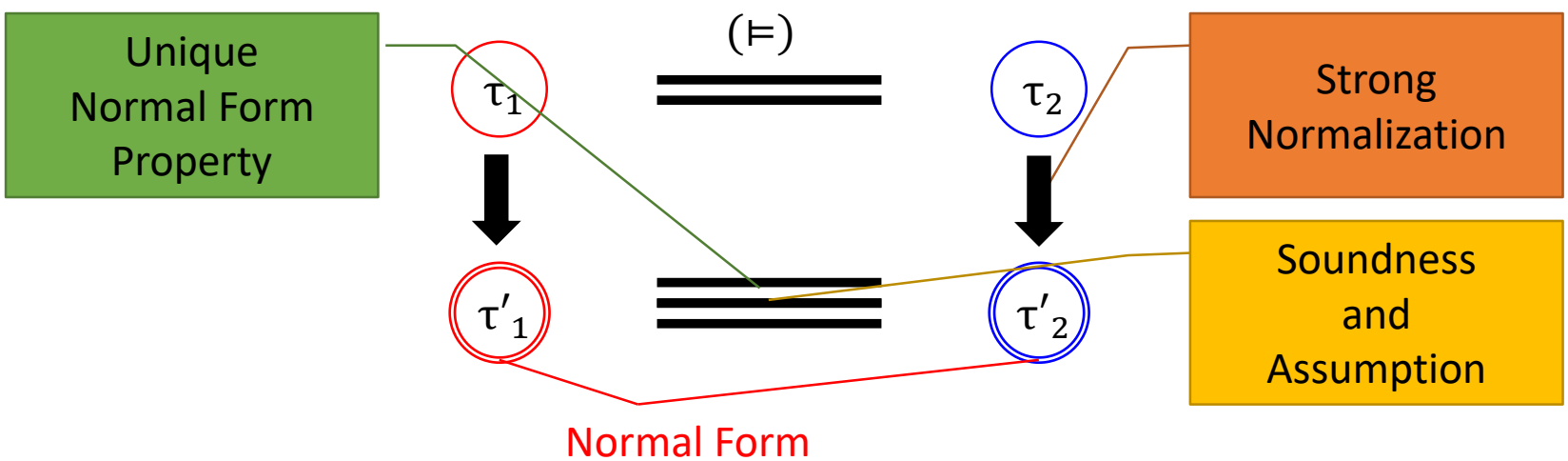

Therefore,

$$\vdash_{A_{CA}} \tau_1 = \tau'_1 \equiv \tau'_2 = \tau_2$$

Outline

- Definition of top tree
- Axiom system
- Completeness
- Conclusion

Conclusion

- Result
  - Complete axiom system for the cluster algebra
    - Completeness is proved by SN and UNF of the reduction system induced by the axioms.

- Future work
  - An efficient algorithm for equivalence checker.
  - Top-tree transformation and equivalence for higher compression rate by top tree.