Model Checking

René Thiemann

Institute of Computer Science
University of Innsbruck

SS 2011

Outline

- Motivation
- Abstraction
- Bisimulation
  - Bisimulation of Transition Systems
  - Bisimulation of States
  - Bisimulation and Temporal Logics
  - Quotient Systems
- Simulation
- Partial Order Reduction
- Summary

Outline

- Motivation
- Abstraction
- Bisimulation
  - Bisimulation of Transition Systems
  - Bisimulation of States
  - Bisimulation and Temporal Logics
  - Quotient Systems
- Simulation
- Partial Order Reduction
- Summary

Model Checking Overview

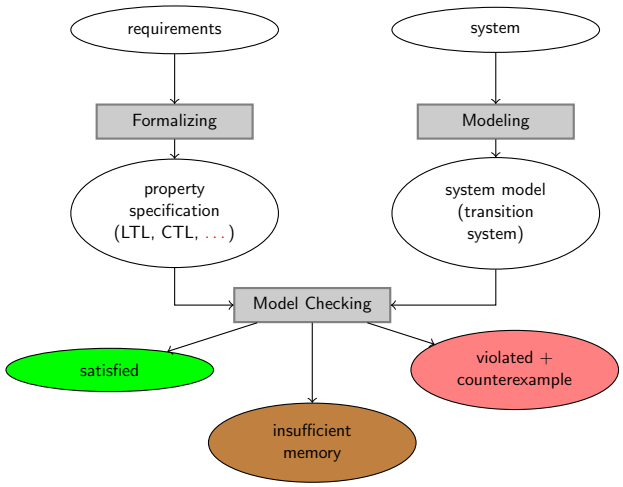

Ways to Solve the State Space Explosion Problem

- Let $TS = (S, \rightarrow, I, AP, L)$ be transition system
- Abstraction: $f : S \rightarrow \widehat{S}$ such that $|\widehat{S}| \ll |S|$, obtain $\widehat{TS}$
- Then perform model checking on abstract system: $\widehat{TS} \models \varphi$?
- Questions:
  - If $\widehat{TS} \models \varphi$, what about $TS \models \varphi$?
  - If $\widehat{TS} \not\models \varphi$, what about $TS \not\models \varphi$
  - How to obtain f?
- Some answers:
  - If $\widehat{TS}$ is a bisimulation of TS then $\widehat{TS} \models \varphi$ iff $TS \models \varphi$ (CTL*)
  - If $\widehat{TS}$ is a simulation of TS then $\widehat{TS} \models \varphi$ implies $TS \models \varphi$ (ACTL*)
  - If TS is a simulation of $\widehat{TS}$ then $\widehat{TS} \models \varphi$ implies $TS \models \varphi$ (ECTL*)
  - Computation of f such that $\widehat{TS}$ is smallest bisimular system to TS

Outline

- Motivation
- Abstraction
- Bisimulation
  - Bisimulation of Transition Systems
  - Bisimulation of States
  - Bisimulation and Temporal Logics
  - Quotient Systems
- Simulation
- Partial Order Reduction
- Summary

Abstraction

Let $TS = (S, \rightarrow, I, AP, L)$ and $\widehat{S}$ be a set of (abstract) states

Definition (Abstraction Function)

A function $f : S \rightarrow \widehat{S}$ is an abstraction function iff

$$f(s) = f(s') \text{ implies } L(s) = L(s')$$

Definition (Abstracted Transition System)

For every abstraction function f, define the over-approximation $TS^f = (\widehat{S}, \rightarrow^f, I^f, AP, L^f)$ where $L^f(f(s)) = L(s)$, $I^f = \{f(s) \mid s \in I\}$, and $\rightarrow^f$ is smallest relation such that

- $s \rightarrow s'$ implies $f(s) \rightarrow^f f(s')$

The under-approximation is $TS_f = (\widehat{S}, \rightarrow_f, I_f, AP, L_f)$ where $L_f = L^f$, $I_f = I^f$, and $\rightarrow_f$ is largest relation such that

- $f(s) \rightarrow_f \widehat{s}$ implies $s \rightarrow s'$ for some s' such that $f(s') = \widehat{s}$

Example

Different Kinds of Abstractions

- Variable abstraction: only store subset of all variables
  e.g., state $(x, y, loc) \rightsquigarrow$ state (x, loc)
- Data abstraction: concrete domain $\rightsquigarrow$ abstract (smaller) domain
  e.g., $\mathbb{N} \rightsquigarrow \{even, odd\}$ or $\mathbb{Z} \rightsquigarrow \{pos, 0, neg\}$
- Predicate abstraction: state $\rightsquigarrow$ valuation of the predicates
  e.g., state $(x, y, loc) \rightsquigarrow$ state $(x > 0, x > y, loc = crit)$

Example: Bakery algorithm

Bakery Algorithm: Transition System

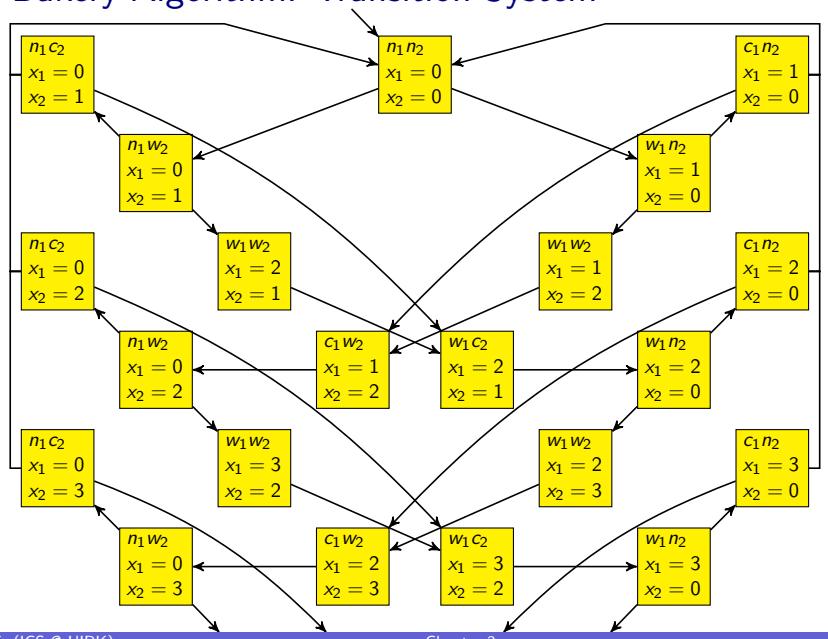

Bakery Algorithm: Abstraction

Abstraction Summary

- Abstraction function $f : S \to \widehat{S}$ for AP such that

$$f(s) = f(s') \text{ implies } L(s) = L(s')$$

- From large (possibly infinite) system TS obtain small (possibly finite) abstract system TS^f or TS_f
- Check $TS^f \models \varphi$ or $TS_f \models \varphi$ instead of $TS \models \varphi$
- Open question: relation between $TS^f \models \varphi$, $TS_f \models \varphi$, and $TS \models \varphi$

Outline

- Motivation
- Abstraction
- Bisimulation
  - Bisimulation of Transition Systems
  - Bisimulation of States
  - Bisimulation and Temporal Logics
  - Quotient Systems
- Simulation
- Partial Order Reduction
- Summary

Bisimulation Between Two Transition Systems

Let $TS_i = (S_i, \to_i, I_i, AP, L_i)$ be two transition systems.

Definition

A relation $R \subseteq S_1 \times S_2$ is a bisimulation relation iff

1. for all $s \in I_1$ exists $t \in I_2 : sRt$ and
   for all $t \in I_2$ exists $s \in I_1 : sRt$ and
2. for all sRt it holds:
   - $L_1(s) = L_2(t)$
   - if $s \to_1 s'$ then $t \to_2 t'$ where $s'Rt'$
   - if $t \to_2 t'$ then $s \to_1 s'$ where $s'Rt'$

TS_1 and TS_2 are bisimilar ($TS_1 \sim TS_2$) iff there is a bisimulation relation R for TS_1 and TS_2

Example

Properties of Bisimulations

Lemma

$\sim$ is an equivalence relation ($\sim$ is reflexive, symmetric, transitive)

Lemma (Path Bisimulation)

Let R be a bisimulation of TS_1 and TS_2, let $s_0 R t_0$.
Then for each path

$$s_0\, s_1\, s_2\, s_3 \ldots \text{ of } TS_1$$

there is a bisimilar path, i.e., a path

$$t_0\, t_1\, t_2\, t_3 \ldots \text{ of } TS_2$$

such that for all i: $s_i R t_i$

Corollary (LTL-Equivalence of Bisimilar Systems)

If $TS_1 \sim TS_2$ then $TS_1 \models \varphi$ iff $TS_2 \models \varphi$ for all LTL-formulas φ

Bisimulation of States

- Up to now: Bisimulation between two transition systems
- Upcoming: Bisimulation between states of same system

$\Rightarrow$ Minimize number of states

Definition (Bisimilar States)

Let $TS = (S, \rightarrow, I, AP, L)$ be a transition system.
$R \subseteq S \times S$ is a bisimulation for TS such that for all sRt:

- $L(s) = L(t)$
- if $s \rightarrow s'$ then $t \rightarrow t'$ where $s' R t'$
- if $t \rightarrow t'$ then $s \rightarrow s'$ where $s' R t'$

States s and t are bisimilar for TS ($s \sim_{TS} t$) iff
there exists bisimulation R for TS with sRt.

Properties of $\sim_{TS}$

Let $TS = (S, \rightarrow, I, AP, L)$ be a transition system.

Lemma

- *$\sim_{TS}$ is an equivalence relation on S*
- *$\sim_{TS}$ is a bisimulation for TS*
- *$\sim_{TS}$ is the largest bisimulation for TS*
- *$s_1 \sim_{TS} s_2$ iff $(S, \rightarrow, \{s_1\}, AP, L) \sim (S, \rightarrow, \{s_2\}, AP, L)$*

Consequence: Deciding $TS_0 \sim TS_1$ via $\sim_{TS}$

Corollary (Check of bisimilarity of transition systems)

Let $TS_i = (S_i, \rightarrow_i, I_i, AP, L_i)$ with $S_0 \cap S_1 = \varnothing$. Then $TS_0 \sim TS_1$ iff

$$\text{for all } s_i \in I_i \text{ there is } s_{1-i} \in I_{1-i} \text{ such that } s_i \sim_{TS} s_{1-i}$$

where $TS = (S_0 \cup S_1, \rightarrow_0 \cup \rightarrow_1, \varnothing, AP, L_0 \cup L_1)$

Proof of Lemma

Combining CTL and LTL: CTL*

A state-formula Φ holds in state s (written $s \models \Phi$) iff

$$
\begin{array}{lll}
s \models a & \text{iff} & a \in L(s) \\
s \models \neg\Phi & \text{iff} & s \not\models \Phi \\
s \models \Phi \wedge \Psi & \text{iff} & s \models \Phi \text{ and } s \models \Psi \\
s \models \mathsf{E}\,\varphi & \text{iff} & \pi \models \varphi \text{ for some path } \pi \text{ that starts in } s
\end{array}
$$

A path-formula φ holds for path π (written $\pi \models \varphi$) iff

$$
\begin{array}{ll}
\pi \models \mathsf{X}\,\varphi & \text{iff } \pi[1..] \models \varphi \\
\pi \models \varphi\,\mathsf{U}\,\psi & \text{iff } (\exists\, n \geqslant 0.\, \pi[n..] \models \psi \text{ and } (\forall\, 0 \leqslant i < n.\, \pi[i..] \models \varphi)) \\
\pi \models \varphi \wedge \psi & \text{iff } \pi \models \varphi \text{ and } \pi \models \psi \\
\pi \models \neg\varphi & \text{iff } \pi \not\models \varphi \\
\pi \models \Phi & \text{iff } \pi[0] \models \Phi
\end{array}
$$

Derived operators: $\mathsf{A}, \mathsf{F}, \mathsf{G}, \vee, \ldots$

Combining CTL and LTL: CTL*

let I be the initial states of TS.

- every LTL formula φ is a CTL* path-formula

  $TS \models \varphi$ (LTL) iff for all $s \in I : s \models \mathsf{A}\,\varphi$ (CTL*)

- every CTL formula Φ is a CTL* state-formula

  $s \models \Phi$ (CTL) iff $s \models \Phi$ (CTL*)

Bisimulation and CTL*

Let $TS = (S, \rightarrow, I, AP, L)$. Define $\equiv_{CTL^*} \subseteq S \times S$ as

$$s \equiv_{CTL^*} t \text{ iff } (s \models \Phi \text{ iff } t \models \Phi) \text{ for all CTL*-state-formulas } \Phi$$

Similar definition for $\equiv_{CTL}$

Theorem

$$\equiv_{CTL} \quad = \quad \equiv_{CTL^*} \quad = \quad \sim_{TS}$$

$\Rightarrow$ Bisimilar systems satisfy the same CTL*-formulas

$\Rightarrow$ Non-bisimilar systems can be distinguished by a CTL-formula

Proof

Proof Continued

Quotient System

Since $\sim_{TS}$ is equivalence relation, we can write $[s]_{\sim_{TS}}$ as the equivalence class to which s belongs ($[s]_{\sim_{TS}} = \{t \mid s \sim_{TS} t\}$).

Definition (Quotient of a Transition System)

Let $TS = (S, \rightarrow, I, AP, L)$. The quotient system $TS/{\sim_{TS}}$ (or $TS/{\sim}$ for short) is defined as $(S', \rightarrow', I', AP, L')$:

- $S' = S/{\sim_{TS}} = \{[s]_{\sim_{TS}} \mid s \in S\}$
- whenever $s \rightarrow t$ then $[s]_{\sim_{TS}} \rightarrow' [t]_{\sim_{TS}}$
- $I' = I/{\sim_{TS}} = \{[s]_{\sim_{TS}} \mid s \in I\}$
- $L'([s]_{\sim_{TS}}) = L(s)$

Theorem

$TS \sim (TS/\sim)$ *(exercise)*

Examples

- Bakery-Algorithm: $TS^f = TS/{\sim}$
  (However, often TS^f is not a bisimulation)
- Vending machines: $TS_2/{\sim} = TS_1$, $s_3 = [t_2]_{\sim_{TS_2}} = [t_3]_{\sim_{TS_2}} = \{t_2, t_3\}$

Obtaining Quotients

If one can compute $\sim_{TS}$ then one can easily

- minimize TS to quotient system $TS/{\sim}$
- check whether $TS_0 \sim TS_1$

Problem: How to obtain $\sim_{TS}$?

- Naive algorithm:
  $\sim_{TS} := \emptyset$
  for all $R \subseteq S \times S$ do
  if R is bisimulation for TS then $\sim_{TS} := \sim_{TS} \cup R$

  Naive algorithm is exponential in $|S| \Rightarrow$ not applicable
- Partition-Refinement-Algorithm, complexity: $\mathcal{O}(|S| \cdot (|AP| + |\rightarrow|))$
- (Improved PR-Algorithm, complexity: $\mathcal{O}(|S| \cdot |AP| + log|S| \cdot |\rightarrow|))$

Idea of a Partition Refinement Algorithm

- Work with partitions $\Pi = \{B_1, \ldots, B_n\}$ of S ($\cup B_i = S$, $B_i \cap B_j = \varnothing$ for $i \neq j$, $B_i \neq \varnothing$)
- Partition Π contains candidates for equivalence classes
- If Π is too coarse since some B contains obviously non-equivalent states s and t then refine Π and split B into smaller parts B_1 and B_2 such that $s \in B_1$ and $t \in B_2$

$\Rightarrow$ Refine initial Π until no further splitting is required

- Final value of $\Pi = \{C_1, \ldots, C_k\}$ contains real equivalence classes C_i of $\sim_{TS}$

$\Rightarrow$ $s \sim_{TS} t$ iff s, t are contained in same C_i

Partition Refinement Algorithm

$\Pi := \Pi_{AP}$ // partitioning of S due to labeling with AP
repeat
  $\Pi_{old} := \Pi$
  for all $C \in \Pi_{old}$ **do**
    $\Pi := \text{refine}(\Pi, C)$
until $\Pi = \Pi_{old}$
return Π // result: $S/{\sim_{TS}}$

function refine(Π, C) // divide partitions due to transitions to C
  return $\bigcup_{B \in \Pi} \text{refine}(B, C)$

function refine(B, C)
  return $\{\{s \in B \mid \exists t \in C : s \to t\}, \{s \in B \mid \text{no } s \to t \text{ with } t \in C\}\} \setminus \{\varnothing\}$

$\Pi_{AP} = \{\{s \mid L(s) = A\} \mid A \subseteq AP\} \setminus \{\varnothing\}$

Example

Properties of refine

Definition

Partition Π is finer than Π' (Π' is coarser than Π) iff

$$\text{for all } B \in \Pi \text{ there exists } C \in \Pi' \text{ such that } B \subseteq C$$

Key lemmas:

Lemma (Coarsest Partition)

$S/{\sim_{TS}}$ is coarsest partition Π such that

- *Π is finer than Π_{AP}*
- *$\text{refine}(\Pi, C) = \Pi$ for all $C \in \Pi$*

Lemma (Properties of refine)

If Π, Π' are coarser than $S/{\sim_{TS}}$ then

- *$\text{refine}(\Pi, C)$ is finer than Π*
- *$\text{refine}(\Pi, C)$ is coarser than $S/{\sim_{TS}}$ for all $C \in \Pi'$*

Proof of Coarsest-Partition Lemma

Properties of the Algorithm

Theorem

- *The algorithm terminates*
- *The complexity is* $\mathcal{O}(|S| \cdot (|AP| + |\rightarrow|))$
- *The result is the set of equivalence classes of* $\sim_{TS}$*, i.e.,* $S/\sim_{TS}$

Proof

Bisimulation Summary

- $TS_1 \sim TS_2$ iff for all CTL*-formulas Φ: $TS_1 \models \Phi \Leftrightarrow TS_2 \models \Phi$

$$\sim \quad = \quad \equiv_{CTL^*}$$

- Smallest bisimilar system to TS: $TS/\sim_{TS} = TS/\sim$
- $\sim_{TS}$ can be used to decide $TS_1 \sim TS_2$
- $\sim_{TS}$ can be computed by partitioning algorithm

Outline

- Motivation
- Abstraction
- Bisimulation
  - Bisimulation of Transition Systems
  - Bisimulation of States
  - Bisimulation and Temporal Logics
  - Quotient Systems
- Simulation
- Partial Order Reduction
- Summary

A Problem

Current approach:

- Given TS, compute $TS/{\sim_{TS}}$ and then check formula
- Often, $TS/{\sim_{TS}}$ is still too large
- Solution: Use abstraction function f such that $TS^f(TS_f) \ll TS/{\sim_{TS}}$
- Problem: for these f, $TS^f \not\sim TS$ and $TS_f \not\sim TS$

$\Rightarrow$ There are CTL*-formulas Φ and Ψ such that

$$TS^f \models \Phi \not\Leftrightarrow TS \models \Phi \quad \text{and} \quad TS_f \models \Psi \not\Leftrightarrow TS \models \Psi$$

$\Rightarrow$ Need for another connection between transition systems

Simulation Between Two Transition Systems

Let $TS_i = (S_i, \rightarrow_i, I_i, AP, L_i)$ be two transition systems.

Definition

A relation $R \subseteq S_1 \times S_2$ is a simulation relation iff

1. for all $s \in I_1$ exists $t \in I_2 : sRt$ and
2. for all sRt it holds:
   - $L_1(s) = L_2(t)$
   - if $s \rightarrow_1 s'$ then $t \rightarrow_2 t'$ where $s'Rt'$

TS_1 is simulated by TS_2 ($TS_1 \preceq TS_2$) iff there is a simulation relation R for TS_1 and TS_2

Note that unlike $\sim$, $\preceq$ is no equivalence relation

Example

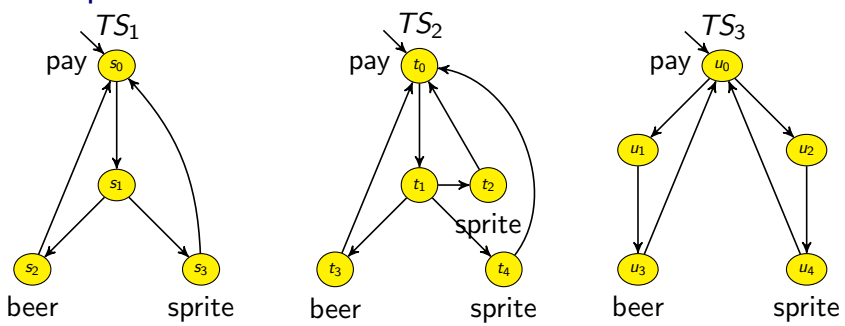

Previous results: $TS_1 \sim TS_2 \not\sim TS_3$

Lemma (Path Simulation)

Let R be a simulation of TS_1 and TS_2, let $s_0 R t_0$.
Then for each path

$$s_0\, s_1\, s_2\, s_3 \ldots \text{ of } TS_1$$

there is a similar path, i.e., a path

$$t_0\, t_1\, t_2\, t_3 \ldots \text{ of } TS_2$$

such that for all i: $s_i R t_i$

Corollary (LTL and Similar Systems)

If $TS_1 \preceq TS_2$ then $TS_1 \models \varphi$ if $TS_2 \models \varphi$ for all LTL-formulas φ and $TS_1 \not\models \varphi$ implies $TS_2 \not\models \varphi$

Corollary (LTL and Similar Systems)

Define $\simeq\, = \preceq \cap \succeq$ (simulation equivalence). Then

$$\simeq \subseteq \equiv_{LTL}$$

Simulations and Abstractions

Theorem

Let TS be some transition system, and f be an abstraction function. Then

$$TS \preceq TS^f \qquad \text{and} \qquad TS_f \preceq TS.$$

Corollary (Model Checking using Abstractions)

Let φ be arbitrary LTL-formula.

- *If $TS^f \models \varphi$ then $TS \models \varphi$*
- *If $TS_f \not\models \varphi$ then $TS \not\models \varphi$*

Proof of Theorem

Properties of $\preceq$

Lemma

- *$\preceq$ is a pre-order (reflexive and transitive)*
- *$\simeq$ is an equivalence relation*
- *$\sim \subseteq \simeq$*

Note that both $\sim$ and $\simeq$ satisfy the path simulation lemma and are equivalence relations. Moreover,

$$\equiv_{CTL^*} = \sim \subseteq \simeq \subseteq \equiv_{LTL}$$

Questions:

- Is $\sim\, = \,\simeq$? Then $\simeq\, = \equiv_{CTL^*}$
- If not, then where is the difference?

Example

Strengthening the Logic

Knowledge:

- $TS_1 \preceq TS_2$ implies $TS_1 \models \varphi \Leftarrow TS_2 \models \varphi$ for LTL-formulas φ
- $TS_1 \succeq TS_2$ implies $TS_1 \not\models \varphi \Leftarrow TS_2 \not\models \varphi$ for LTL-formulas φ
- $TS_1 \simeq TS_2$ implies $TS_1 \models \varphi \Leftrightarrow TS_2 \models \varphi$ for LTL-formulas φ
- $TS_1 \simeq TS_2$ does not imply $TS_1 \models \Phi \Leftrightarrow TS_2 \models \Phi$ for CTL-formulas Φ
- $TS \preceq TS^f$ and $TS \succeq TS_f$

Want:

- Stronger logic than LTL which allows model-checking via TS^f:

$$TS \models \Phi \quad \Leftarrow \quad TS^f \models \Phi$$

- Logic which allows model-checking via TS_f:

$$TS \models \Phi \quad \Leftarrow \quad TS_f \models \Phi$$

ACTL* = CTL* with All-Quantifier Only

ACTL*-state-formulas:

$$\Phi ::= a \mid \neg a \mid \Phi \vee \Phi \mid \Phi \wedge \Phi \mid \mathsf{A}\,\varphi$$

ACTL*-path-formulas:

$$\varphi ::= \mathsf{X}\,\varphi \mid \varphi\,\mathsf{U}\,\varphi \mid \varphi\,\mathsf{R}\,\varphi \mid \varphi \vee \varphi \mid \varphi \wedge \varphi \mid \Phi$$

Semantics of release-operator R:

$\pi \models \varphi\,\mathsf{R}\,\psi$ iff $\forall\, n : \pi[n..] \models \psi$ or $(\exists\, i : \pi[i..] \models \varphi$ and $\forall\, j \leqslant i : \pi[j..] \models \psi)$

Derived path-operators:

$$\mathsf{F}\,\varphi \equiv \mathsf{true}\,\mathsf{U}\,\varphi \qquad \text{and} \qquad \mathsf{G}\,\varphi \equiv \mathsf{false}\,\mathsf{R}\,\varphi$$

Equivalences:

$$\neg(\varphi\,\mathsf{U}\,\psi) \equiv \neg\varphi\,\mathsf{R}\,\neg\psi \qquad \text{and} \qquad \neg(\varphi\,\mathsf{R}\,\psi) \equiv \neg\varphi\,\mathsf{U}\,\neg\psi$$

Comparing LTL, ACTL*, and CTL*

Theorem

- *ACTL* strictly subsumes LTL*
- *CTL* strictly subsumes ACTL**

ACTL* strictly subsumes LTL

- First we show that each LTL-formula φ can be translated into positive normal form (PNF), where LTL-formula in PNF has following shape:

$$\varphi ::= \mathsf{X}\,\varphi \mid \varphi\,\mathsf{U}\,\varphi \mid \varphi\,\mathsf{R}\,\varphi \mid \varphi \vee \varphi \mid \varphi \wedge \varphi \mid a \mid \neg a$$

$$\begin{array}{rcl} \neg\neg\varphi & \rightsquigarrow & \varphi \\ \neg\mathsf{X}\,\varphi & \rightsquigarrow & \mathsf{X}\,\neg\varphi \\ \neg(\varphi\,\mathsf{U}\,\psi) & \rightsquigarrow & \neg\varphi\,\mathsf{R}\,\neg\psi \\ \neg(\varphi\,\mathsf{R}\,\psi) & \rightsquigarrow & \neg\varphi\,\mathsf{U}\,\neg\psi \\ \neg(\varphi \wedge \psi) & \rightsquigarrow & \neg\varphi \vee \neg\psi \\ \neg(\varphi \vee \psi) & \rightsquigarrow & \neg\varphi \wedge \neg\psi \end{array}$$

  Hence, for LTL-formula φ obtain equivalent ψ in PNF. Then φ is equivalent to the ACTL*-formula $\mathsf{A}\,\psi$. Thus, ACTL* subsumes LTL.

CTL* strictly subsumes ACTL*

- Obviously, CTL* subsumes ACTL* as release can be expressed using negation and until:

$$\varphi\,\mathsf{R}\,\psi \equiv \neg\neg(\varphi\,\mathsf{R}\,\psi) \equiv \neg(\neg\varphi\,\mathsf{U}\,\neg\psi)$$

- Similar to the previous results between $\sim$ and CTL* one can show that for all ACTL* formulas Φ:

$$TS_1 \preceq TS_2 \text{ implies } TS_1 \models \Phi \text{ if } TS_2 \models \Phi$$

  Hence,

$$\equiv_{CTL^*} = \sim \subset \simeq \subseteq \equiv_{ACTL^*}$$

  shows that there must be CTL*-formulas which cannot be expressed in ACTL*, i.e., CTL* strictly subsumes ACTL*.

ECTL*

Results so far:

- ACTL*: Stronger logic than LTL, model-checking via TS^f:

$$TS \models \Phi \quad \Leftarrow \quad TS^f \models \Phi$$

- ECTL*: Logic, model-checking via TS_f:

$$TS \models \Phi \quad \Leftarrow \quad TS_f \models \Phi$$

ECTL*-state-formulas:

$$\Phi ::= a \mid \neg a \mid \Phi \vee \Phi \mid \Phi \wedge \Phi \mid \mathsf{E}\,\varphi$$

ECTL*-path-formulas:

$$\varphi ::= \mathsf{X}\,\varphi \mid \varphi\,\mathsf{U}\,\varphi \mid \varphi\,\mathsf{R}\,\varphi \mid \varphi \vee \varphi \mid \varphi \wedge \varphi \mid \Phi$$

Simulation Summary

- Abstractions do not often lead to bisimulations, but always result in simulations:

$$TS \preceq TS^f \qquad \text{and} \qquad TS_f \succeq TS$$

- ACTL* is between LTL and CTL* and can be checked for model-checking using abstractions (over-approximations)

$$TS_1 \preceq TS_2 \text{ implies } TS_1 \models \Phi \text{ if } TS_2 \models \Phi$$

- ECTL* is sublogic of CTL* and can be checked for model-checking using abstractions (under-approximations)

$$TS_1 \succeq TS_2 \text{ implies } TS_1 \models \Phi \text{ if } TS_2 \models \Phi$$

- Reversing the directions yields methods to refute formulas
- Not shown:
  - Computing the quotient of $\simeq$ in analogy to $S/{\sim}$
  - How to obtain initial abstractions, abstraction refinement

Outline

- Motivation
- Abstraction
- Bisimulation
  - Bisimulation of Transition Systems
  - Bisimulation of States
  - Bisimulation and Temporal Logics
  - Quotient Systems
- Simulation
- Partial Order Reduction
- Summary

A problem with parallel composition of local transitions

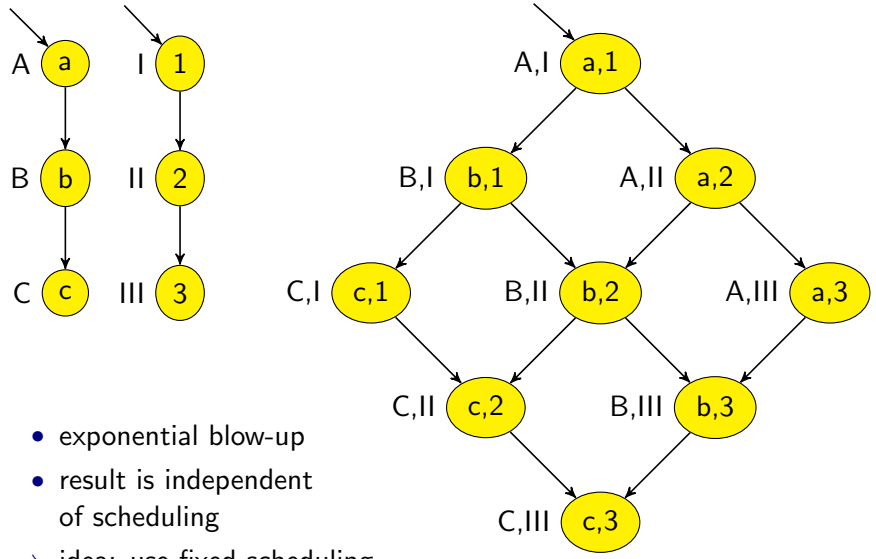

- exponential blow-up
- result is independent of scheduling

⇒ idea: use fixed scheduling

Partial order reduction

- partial order reduction uses fixed order to schedule local transitions

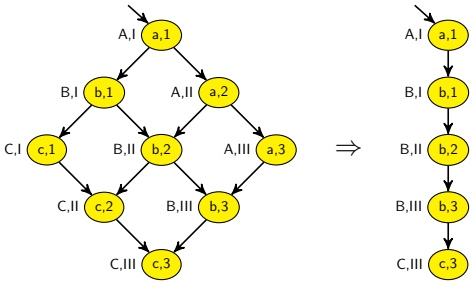

1. properties that have to checked must not include X:
   $\mathsf{G}\,(A \Rightarrow \mathsf{X}\,B)$ is satisfied in small TS, but not in original
   (limits specifications; example: Spin does not allow X in default conf.)
2. reduction has to be aware of property:
   $\neg\mathsf{F}\,(C \wedge II)$ is satisfied in small TS, but not in original
   (is ensured by partial order reduction algorithm)

Summary: partial order reduction

- partial order reduction determines fixed scheduling for local (independent) transitions of multiple processes
- vastly reduces size of transition system
- forbids the use of next-operator X
- for more details, cf. Chapter 8 of "Principles of Model Checking"

Outline

- Motivation
- Abstraction
- Bisimulation
  - Bisimulation of Transition Systems
  - Bisimulation of States
  - Bisimulation and Temporal Logics
  - Quotient Systems
- Simulation
- Partial Order Reduction
- Summary

Summary

- Aim: Try to solve the state-space explosion problem
- Bisimular systems satisfy the same CTL*-formulas
- Quotient $S/\sim$ can efficiently be determined by partition-refinement
- If quotient is too large, one can further reduce the system-size by abstractions (over-approximation TS^f and under-approximation TS_f) $\Rightarrow$ obtain simulation only
- For simulations LTL and (A/E)CTL* can be used, but neither CTL nor CTL*
- Partial order reduction uses fixed order for independent actions
- Challenge: Find good abstractions