# Introduction to Model Checking

René Thiemann

Institute of Computer Science
University of Innsbruck

WS 2010/2011



## Outline

- LTL - Linear Time Logic
  - Syntax and Semantics
  - Equivalences
- LTL Model Checking
  - Overview
  - Transforming LTL into GNBAs
  - Complexity of LTL Model Checking

# Outline

- LTL - Linear Time Logic
  - Syntax and Semantics
  - Equivalences
- LTL Model Checking
  - Overview
  - Transforming LTL into GNBAs
  - Complexity of LTL Model Checking





# Model checking overview

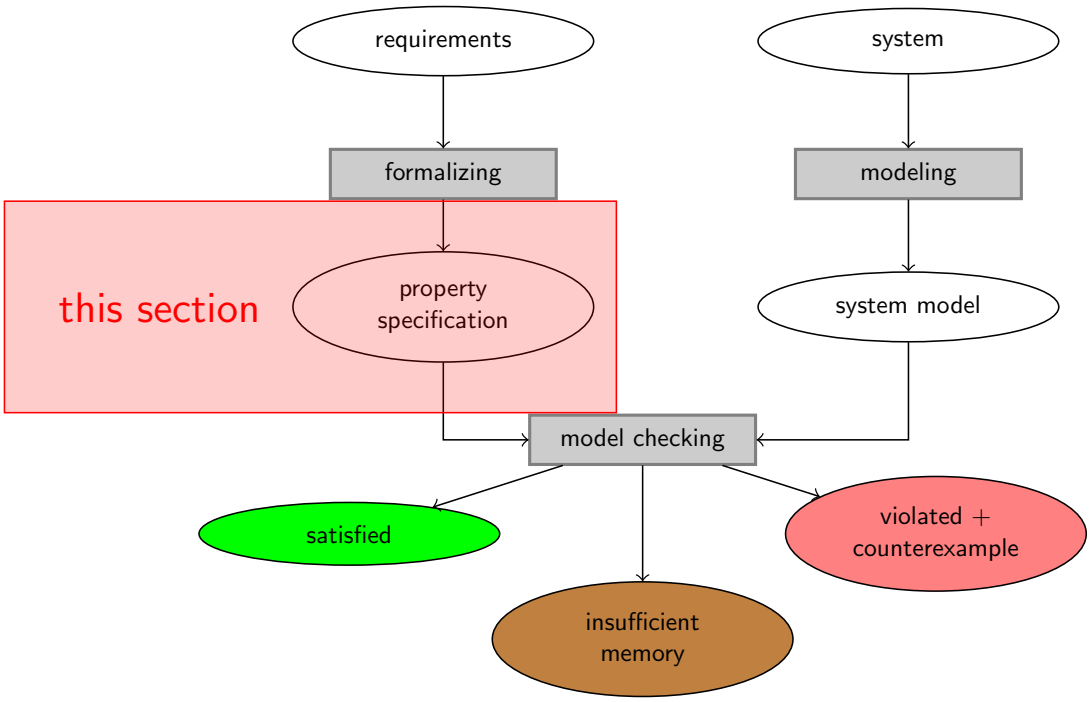

## Motivation

- so far, we used GNBAs as requirements specification

$\Rightarrow$ larger specification become unreadable
(think of an intersection GNBA of four properties)

$\Rightarrow$ need nicer way to precisely state requirements

$\Rightarrow$ LTL





## Syntax of Linear Temporal Logic

modal logic over infinite sequences [Pnueli 1977]

- propositional logic
  - true
  - $a, \text{paid}, \text{sprite}, \ldots \in AP$ — atomic proposition
  - $\neg\varphi$ and $\varphi \wedge \psi$ — negation and conjunction
- temporal operators
  - $\mathsf{X}\,\varphi$ — neXt step fulfills $\varphi$
  - $\mathsf{F}\,\varphi$ — sometimes in the Future $\varphi$ will hold
  - $\mathsf{G}\,\varphi$ — $\varphi$ Globally holds
  - $\varphi\,\mathsf{U}\,\psi$ — $\varphi$ holds Until $\psi$ holds

linear temporal logic is a logic for describing linear time properties

precedence order: the unary operators bind stronger than the binary ones.
$\neg$ and $\mathsf{X}$ bind equally strong. $\mathsf{U}$ takes precedence over $\wedge$, $\vee$, and $\Rightarrow$

$$\neg, \mathsf{X}, \mathsf{F}, \mathsf{G} \quad > \quad \mathsf{U} \quad > \quad \wedge, \vee, \Rightarrow, \Leftrightarrow$$

# Intuitive semantics

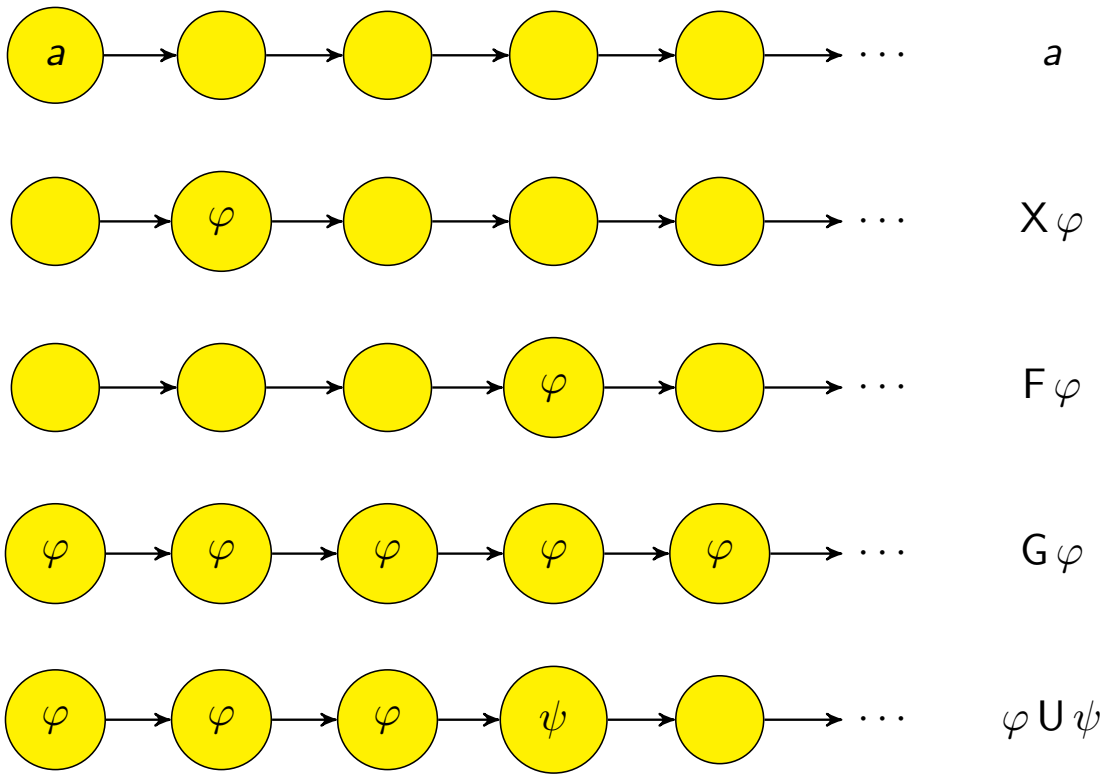






# Derived Boolean operators

$$
\begin{aligned}
\text{false} &\equiv \neg\text{true} \\
\varphi \vee \psi &\equiv \neg(\neg\varphi \wedge \neg\psi) \\
\varphi \Rightarrow \psi &\equiv \neg\varphi \vee \psi \\
\varphi \Leftrightarrow \psi &\equiv (\varphi \Rightarrow \psi) \wedge (\psi \Rightarrow \varphi) \\
\varphi \oplus \psi &\equiv \neg(\varphi \Leftrightarrow \psi)
\end{aligned}
$$

## Practical properties in LTL

- Reachability $\mathsf{F}\,\psi$
- Safety $\mathsf{G}\,\neg\varphi$
- Liveness $\mathsf{G}\,(\varphi \Rightarrow \mathsf{F}\,\psi)$ and others
- Fairness $\mathsf{G}\,\mathsf{F}\,\varphi$ and others





## Properties of a traffic light

- the light is never red and green: $\neg\,(\text{red} \wedge \text{green})$
- whenever the light is red, it cannot become green immediately afterwards:

$$\text{red} \Rightarrow \neg\,\mathsf{X}\,\text{green}$$

- eventually, the light becomes green: $\mathsf{F}\,\text{green}$
- green holds until red appears and at sometime orange appears; moreover, the red is later than the orange

$$(\text{green}\,\mathsf{U}\,\text{red}) \wedge \mathsf{F}\,(\text{orange} \wedge \mathsf{X}\,\mathsf{F}\,\text{red})$$

most of these requirements do not correspond to the specifications

## Requirements from Chapter 2, slide 27

1. always at most one traffic light is showing green
2. green cannot be directly followed by red
3. we will see green infinitely often
4. whenever we select sprite then later on we will get a sprite





## Semantics over words

the language induced by LTL formula $\varphi$ over $AP = \{a_1, \ldots, a_n\}$ is:

$$\mathcal{L}(\varphi) \;=\; \left\{ w \in \left(2^{AP}\right)^{\omega} \mid w \models \varphi \right\}, \text{where } \models \text{ is defined as follows:}$$

(let $w = A_0 A_1 A_2 \ldots$ and $w[i..] = A_i A_{i+1} A_{i+2} \ldots$ is the suffix of $w$ from index $i$ on)

| | | | |
|---|---|---|---|
| $w$ | $\models$ | true | |
| $w$ | $\models$ | $a_i$ | iff $a_i \in A_0$ |
| $w$ | $\models$ | $\varphi_1 \wedge \varphi_2$ | iff $w \models \varphi_1$ and $w \models \varphi_2$ |
| $w$ | $\models$ | $\neg\varphi$ | iff $w \not\models \varphi$ |
| $w$ | $\models$ | $\mathsf{X}\,\varphi$ | iff $w[1..] = A_1 A_2 A_3 \ldots \models \varphi$ |
| $w$ | $\models$ | $\varphi_1 \,\mathsf{U}\, \varphi_2$ | iff $\exists j \geqslant 0.\ w[j..] \models \varphi_2$ and $\forall 0 \leqslant i < j : w[i..] \models \varphi_1$ |
| $w$ | $\models$ | $\mathsf{F}\,\varphi$ | iff $\exists j \geqslant 0.\ w[j..] \models \varphi$ |
| $w$ | $\models$ | $\mathsf{G}\,\varphi$ | iff $\forall j \geqslant 0.\ w[j..] \models \varphi$ |

## Often used constructs

- $w \models \mathsf{G}\,\mathsf{F}\,\varphi$ iff $\forall i \;: w[i..] \models \mathsf{F}\,\varphi$
  iff $\forall i\; \exists j : w[i..][j..] \models \varphi$
  iff $\forall i\; \exists j : w[i+j..] \models \varphi$
  iff $\forall i\; \exists j \geqslant i : w[j..] \models \varphi$
  iff infinitely often $\varphi$ is satisfied in $w$

- $w \models \mathsf{F}\,\mathsf{G}\,\varphi$ iff $\exists i\; \forall j \geqslant i : w[j..] \models \varphi$ iff
  from some point onwards $\varphi$ is always satisfied in $w$





## Semantics for Transition Systems

semantics is defined via set inclusion as indicated in previous section, so a system satisfies a formula iff all traces are allowed w.r.t. the formula:

$$TS \models \varphi \text{ iff } \mathit{Traces}(TS) \subseteq \mathcal{L}(\varphi)$$

# A note on negations

for trace $w$, it holds $w \models \varphi$ iff $w \not\models \neg\varphi$ since

$$\mathcal{L}(\neg\varphi) = \left(2^{AP}\right)^{\omega} \setminus \mathcal{L}(\varphi)$$

but: $TS \not\models \varphi$ and $TS \models \neg\varphi$ are not equivalent in general
usually it holds: $TS \models \neg\varphi$ implies $TS \not\models \varphi$ but not always the reverse!

example:





# Equivalence of LTL formulas

## Definition (Equivalence)

LTL formulas $\varphi, \psi$ are equivalent, denoted $\varphi \equiv \psi$, iff

$$\mathcal{L}(\varphi) = \mathcal{L}(\psi)$$

equivalences are useful to

- simplify formulas
- reduce the number of operators in algorithms / proofs

proving a new equivalence

- is a proof of set-equality $\mathcal{L}(\varphi) = \mathcal{L}(\psi)$
- can be done by showing for all words $w$ that $w \in \mathcal{L}(\varphi)$ iff $w \in \mathcal{L}(\psi)$

## Deriving F and G

- $\mathsf{F}\,\varphi \equiv \mathsf{true}\,\mathsf{U}\,\varphi$
- $\mathsf{G}\,\varphi \equiv \neg(\mathsf{F}\,\neg\varphi) \equiv \neg(\mathsf{true}\,\mathsf{U}\,\neg\varphi)$

$\Rightarrow$ the temporal operators X and U suffice to express every LTL formula





## Duality and idempotence laws

duality:

$$\begin{aligned} \neg\,\mathsf{G}\,\varphi &\equiv \mathsf{F}\,\neg\,\varphi \\ \neg\,\mathsf{F}\,\varphi &\equiv \mathsf{G}\,\neg\,\varphi \\ \neg\,\mathsf{X}\,\varphi &\equiv \mathsf{X}\,\neg\,\varphi \end{aligned}$$

idempotency:

$$\begin{aligned} \mathsf{G}\,\mathsf{G}\,\varphi &\equiv \mathsf{G}\,\varphi \\ \mathsf{F}\,\mathsf{F}\,\varphi &\equiv \mathsf{F}\,\varphi \\ \varphi\,\mathsf{U}\,(\varphi\,\mathsf{U}\,\psi) &\equiv \varphi\,\mathsf{U}\,\psi \\ (\varphi\,\mathsf{U}\,\psi)\,\mathsf{U}\,\psi &\equiv \varphi\,\mathsf{U}\,\psi \end{aligned}$$

## Absorption and distributive laws

absorption:

$$\mathsf{F}\,\mathsf{G}\,\mathsf{F}\,\varphi \equiv \mathsf{G}\,\mathsf{F}\,\varphi$$

$$\mathsf{G}\,\mathsf{F}\,\mathsf{G}\,\varphi \equiv \mathsf{F}\,\mathsf{G}\,\varphi$$

distribution:

$$\mathsf{X}\,(\varphi\,\mathsf{U}\,\psi) \equiv \mathsf{X}\,\varphi\,\mathsf{U}\,\mathsf{X}\,\psi$$

$$\mathsf{F}\,(\varphi \vee \psi) \equiv \mathsf{F}\,\varphi \vee \mathsf{F}\,\psi$$

$$\mathsf{G}\,(\varphi \wedge \psi) \equiv \mathsf{G}\,\varphi \wedge \mathsf{G}\,\psi$$

but:

$$\mathsf{F}\,(\varphi \wedge \psi) \not\equiv \mathsf{F}\,\varphi \wedge \mathsf{F}\,\psi$$

$$\mathsf{G}\,(\varphi \vee \psi) \not\equiv \mathsf{G}\,\varphi \vee \mathsf{G}\,\psi$$





## Expansion laws

expansion:

$$\mathsf{F}\,\varphi \equiv \varphi \vee \mathsf{X}\,\mathsf{F}\,\varphi$$

$$\mathsf{G}\,\varphi \equiv \varphi \wedge \mathsf{X}\,\mathsf{G}\,\varphi$$

$$\varphi\,\mathsf{U}\,\psi \equiv \psi \vee (\varphi \wedge \mathsf{X}(\varphi\,\mathsf{U}\,\psi))$$

# Outline

- LTL - Linear Time Logic
  - Syntax and Semantics
  - Equivalences
- LTL Model Checking
  - Overview
  - Transforming LTL into GNBAs
  - Complexity of LTL Model Checking





# Model checking overview

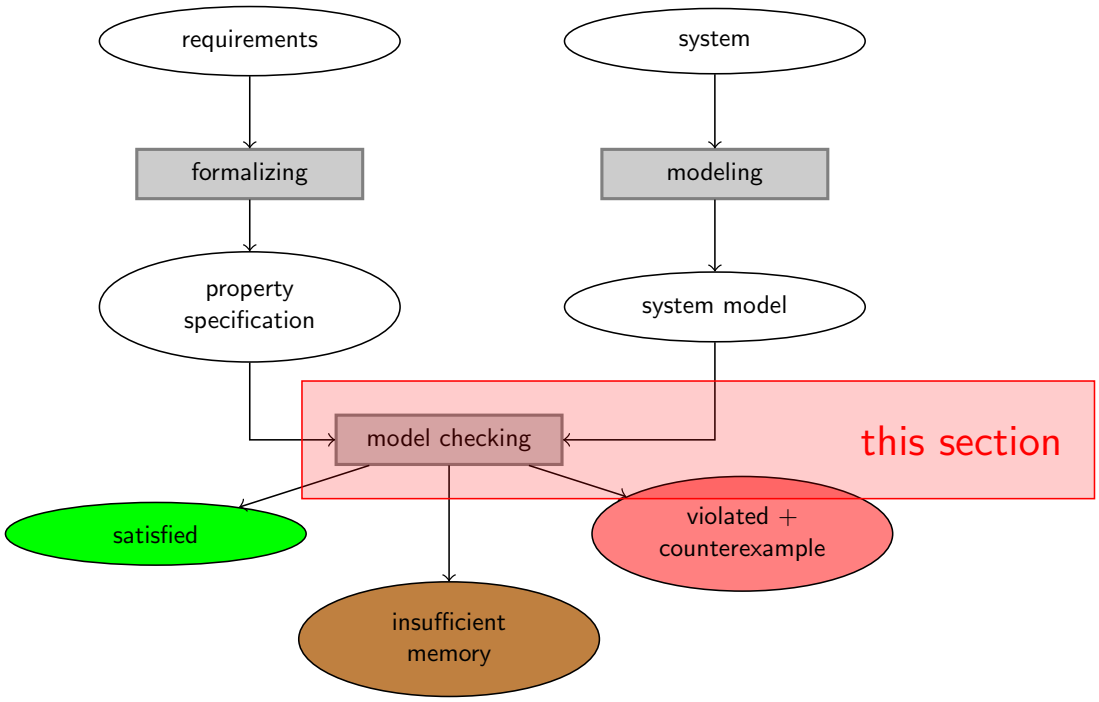

# LTL Model Checking using GNBAs

transition system $TS$ and LTL formula $\varphi$ given

$$\begin{aligned} & TS \models \varphi \\ \text{iff} \quad & \mathit{Traces}(TS) \subseteq \mathcal{L}(\varphi) \\ \text{iff} \quad & \mathit{Traces}(TS) \setminus \mathcal{L}(\varphi) = \mathit{Traces}(TS) \cap \mathcal{L}(\neg\varphi) = \varnothing \end{aligned}$$

$\Rightarrow$ LTL model checking can be done in four steps

1. calculate GNBA $\mathcal{A}_{TS}$ with $\mathit{Traces}(TS) = \mathcal{L}(\mathcal{A}_{TS})$ (Chapter 2)
2. calculate GNBA $\mathcal{A}_{\neg\varphi}$ with $\mathcal{L}(\neg\varphi) = \mathcal{L}(\mathcal{A}_{\neg\varphi})$ (this section)
3. calculate GNBA $\mathcal{A}$ for intersection of $\mathcal{A}_{TS}$ and $\mathcal{A}_{\neg\varphi}$ (Chapter 2)
4. perform non-emptyness test for $\mathcal{L}(\mathcal{A})$ (Chapter 2)





# Fischer Ladner Closure

let $\varphi$ be an LTL formula over $AP = \{a_1, \ldots, a_n\}$.

## Definition

the Fischer Ladner closure $cl(\varphi)$ is the list of sub-formulas of $\varphi$ (starting from small formulas and ending with $\varphi$):

$$a_1, \ldots, a_n, \ldots, \varphi$$

## Example

# $\varphi$-Expansion

idea:

- expand word by new row for each $\psi \in cl(\varphi)$ which is not an atomic proposition
- write truth-values of $\psi$ in $i$-th column for subword $w[i..]$

## Definition

for $w \in (2^n)^\omega$ and LTL-formula $\varphi$ with $cl(\varphi) = \varphi_1, \ldots, \varphi_m$ define the $\varphi$-expansion as word $v \in (2^m)^\omega$:

$$v[i]^j = 1 \text{ iff } w[i..] \models \varphi_j$$

($v[i]$ is the $i$-th letter of the infinite word $v$,
and $v[i]^j$ is the $j$-th component of the vector $v[i]$)





# Example

$\varphi$-expansion for $\varphi = \neg b \wedge (\mathsf{X}\, a \,\mathsf{U}\, b)$

# Idea of LTL to GNBA Translation

- GNBA guesses the $\varphi$-expansion of $w$
- ...and checks that guesses are correct (mostly done locally!)
- ...and demands that value for whole formula is 1 for whole word $w$

## Definition (Consistency Checks)

let $cl(\varphi) = \varphi_1, \ldots, \varphi_m$; a sequence of two successive vectors $(b_1, \ldots, b_m)^T$ $(c_1, \ldots, c_m)^T$ is consistent w.r.t. $cl(\varphi)$ iff whenever

$$\begin{array}{ll}
\varphi_j = \text{true} & \text{then } b_j \\
\varphi_j = \neg\varphi_{j_1} & \text{then } b_j \Leftrightarrow \neg b_{j_1} \\
\varphi_j = \varphi_{j_1} \wedge \varphi_{j_2} & \text{then } b_j \Leftrightarrow (b_{j_1} \wedge b_{j_2}) \\
\varphi_j = \mathsf{X}\,\varphi_{j_1} & \text{then } b_j \Leftrightarrow c_{j_1} \\
\varphi_j = \varphi_{j_1} \,\mathsf{U}\, \varphi_{j_2} & \text{then } b_j \Leftrightarrow (b_{j_2} \vee (b_{j_1} \wedge c_j))
\end{array}$$

(for last check recall expansion law: $\varphi_{j_1} \,\mathsf{U}\, \varphi_{j_2} \equiv \varphi_{j_2} \;\vee\; (\varphi_{j_1} \wedge \mathsf{X}\,(\varphi_{j_1} \,\mathsf{U}\, \varphi_{j_2}))$)





# Consistency Checks and LTL-Models

## Lemma

*$w \models \varphi$ iff there exists an expansion $v \in (2^m)^\omega$ of $w$ such that*

1. *$v[i]\ v[i+1]$ is consistent for all $i$*
2. *$v[0]^m = 1$*
3. *whenever $\varphi_j = \varphi_{j_1} \,\mathsf{U}\, \varphi_{j_2}$ and $v[i]^j = 1$ then there exists $i' \geqslant i$ such that $v[i']^{j_2} = 1$*

# Translating LTL to GNBA

## Definition (GNBA for an LTL formula $\varphi$)

let $cl(\varphi) = a_1, \ldots, a_n, \varphi_{n+1}, \ldots, \varphi_m$ where $\varphi_m = \varphi$
define $\mathcal{A}_\varphi = (2^m \uplus \{q_0\}, 2^n, q_0, \delta, F_1, \ldots, F_k)$ where

- $(c_1, \ldots, c_m)^T \in \delta((b_1, \ldots, b_m)^T, (d_1, \ldots, d_n)^T)$ iff
  1. $c_j \Leftrightarrow d_j$ for all $j \leqslant n$ (expansion)
  2. $(b_1, \ldots, b_m)^T$ $(c_1, \ldots, c_m)^T$ is consistent (consistent expansion)
- $(c_1, \ldots, c_m)^T \in \delta(q_0, (d_1, \ldots, d_n)^T)$ iff
  1. $c_j \Leftrightarrow d_j$ for all $j \leqslant n$ (expansion)
  2. $c_m$ ($\varphi$ is satisfied)
- if $\varphi_j = \varphi_{j_1} \mathsf{U} \varphi_{j_2}$ is $i$-th $\mathsf{U}$-subformula in $cl(\varphi)$ then

$$F_i = \{(b_1, \ldots, b_m)^T \mid \neg b_j \vee b_{j_2}\}$$





# Example

# Example (parts of GNBA)

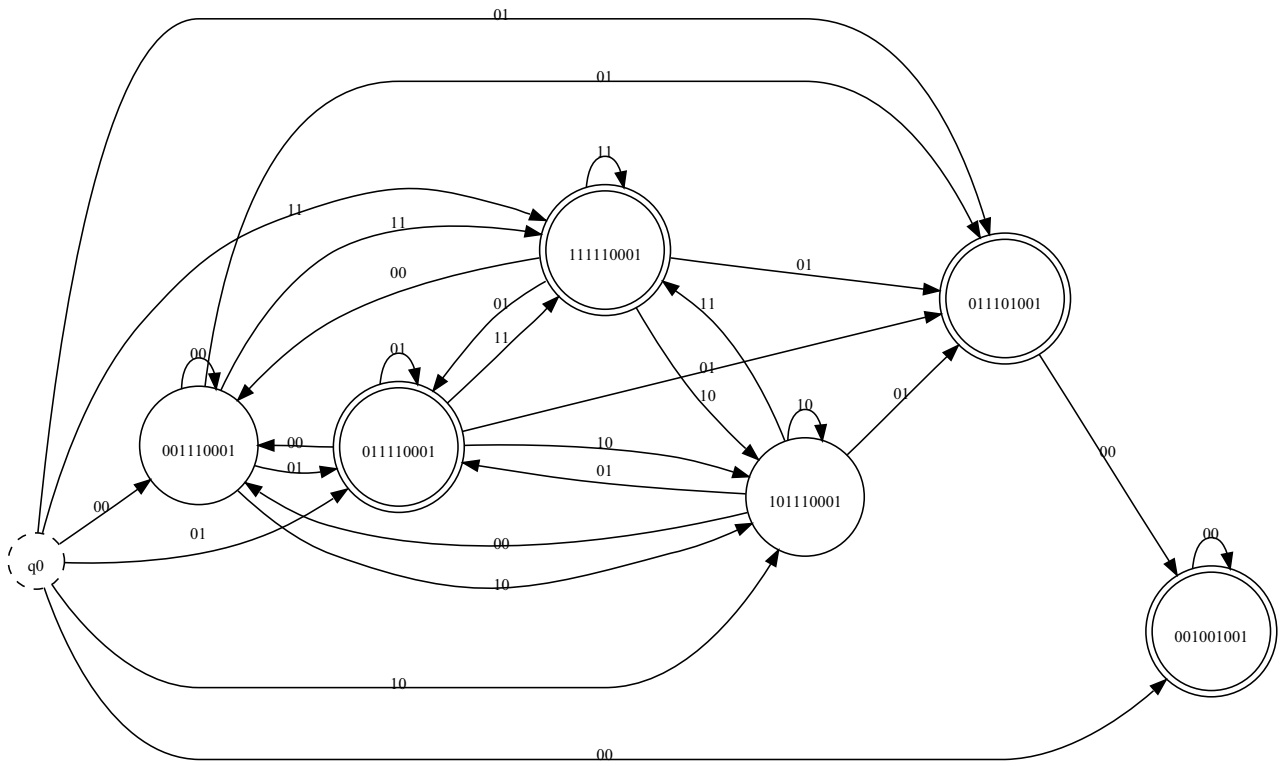






# Soundness of Translation

## Theorem

*for every LTL formula* $\varphi$

$$\mathcal{L}(\varphi) = \mathcal{L}(\mathcal{A}_\varphi)$$

## Proof of Lemma.

by induction on $\varphi$ using the consistency checks ■

## Proof of Theorem.

- construction of $\mathcal{A}_\varphi$ directly corresponds to requirements 1 and 2 in lemma
- remaining difficulty:
  show that visiting $F_i$ infinitely often is the same as requirement 3 in lemma for $i$-th $\mathsf{U}$-subformula $\varphi_j = \varphi_{j_1} \mathsf{U} \varphi_{j_2}$ ■

# Optimizing the Translation

- observation: many states do not have outgoing transitions
- reason: several inconsistencies due to Boolean conditions
  example: if $\varphi_j = \varphi_{j_1} \wedge \varphi_{j_2}$ then $b_j$ cannot be freely chosen;
  value of $b_j$ is determined by $b_{j_1}$ and $b_{j_2}$
- idea: take reduced Fischer-Ladner closure $cl'(\varphi)$ which only contains
  - atomic propositions
  - X-formulas
  - U-formulas
  - ...and no other formula

  and then incorporate the Boolean connectives directly into consistency, final states, ...





# Towards an Improved Translation

let $cl'(\varphi) = \varphi_1, \ldots, \varphi_m$ over $AP = \{a_1, \ldots, a_n\}$

## Definition (Unwinding)

the unwinding of a subformula $\psi$ of $\varphi$ w.r.t. a vector $B = (b_1, \ldots, b_m)$ is defined as $\mathcal{U}_B(\psi)$ where

$$\begin{aligned}
\mathcal{U}_B(a_i) &= b_i \text{ for all atomic propositions } a_i \\
\mathcal{U}_B(\text{true}) &= \text{true} \\
\mathcal{U}_B(\neg\psi) &= \neg\mathcal{U}_B(\psi) \\
\mathcal{U}_B(\psi_1 \wedge \psi_2) &= \mathcal{U}_B(\psi_1) \wedge \mathcal{U}_B(\psi_2) \\
\mathcal{U}_B(\mathsf{X}\,\psi) &= b_j \text{ where } n < j \leqslant m \text{ is the index s.t. } \varphi_j = \mathsf{X}\,\psi \\
\mathcal{U}_B(\psi\,\mathsf{U}\,\chi) &= b_j \text{ where } n < j \leqslant m \text{ is the index s.t. } \varphi_j = \psi\,\mathsf{U}\,\chi
\end{aligned}$$

# Towards an Improved Translation (2)

## Definition (Compressed Consistency Checks)

let $cl'(\varphi) = \varphi_1, \ldots, \varphi_m$; a sequence of two successive vectors $B = (b_1, \ldots, b_m)^T$ and $C = (c_1, \ldots, c_m)^T$ is consistent w.r.t. $cl'(\varphi)$ iff whenever

$$\begin{array}{ll} \varphi_j = \mathsf{X}\,\psi & \text{then } b_j \Leftrightarrow \mathcal{U}_C(\psi) \\ \varphi_j = \psi\,\mathsf{U}\,\chi & \text{then } b_j \Leftrightarrow (\mathcal{U}_B(\chi) \vee (\mathcal{U}_B(\psi) \wedge c_j)) \end{array}$$





# Improved Translation

## Definition

let $cl'(\varphi) = a_1, \ldots, a_n, \varphi_{n+1}, \ldots, \varphi_m$ define $\mathcal{A}_\varphi = (2^m \uplus \{q_0\}, 2^n, q_0, \delta, F_1, \ldots, F_k)$ where

- $(c_1, \ldots, c_m)^T \in \delta((b_1, \ldots, b_m)^T, (d_1, \ldots, d_n)^T)$ iff
  1. $c_j \Leftrightarrow d_j$ for all $j \leqslant n$ (expansion)
  2. $(b_1, \ldots, b_m)^T$ $(c_1, \ldots, c_m)^T$ is consistent (consistent expansion)
- $C = (c_1, \ldots, c_m)^T \in \delta(q_0, (d_1, \ldots, d_n)^T)$ iff
  1. $c_j \Leftrightarrow d_j$ for all $j \leqslant n$ (expansion)
  2. $\mathcal{U}_C(\varphi)$ ($\varphi$ is satisfied)
- if $\varphi_j = \psi\,\mathsf{U}\,\chi$ is $i$-th $\mathsf{U}$-subformula in $cl(\varphi)$ then

$$F_i = \{B = (b_1, \ldots, b_m)^T \mid \neg b_j \vee \mathcal{U}_B(\chi)\}$$

# Example





# Example GNBA

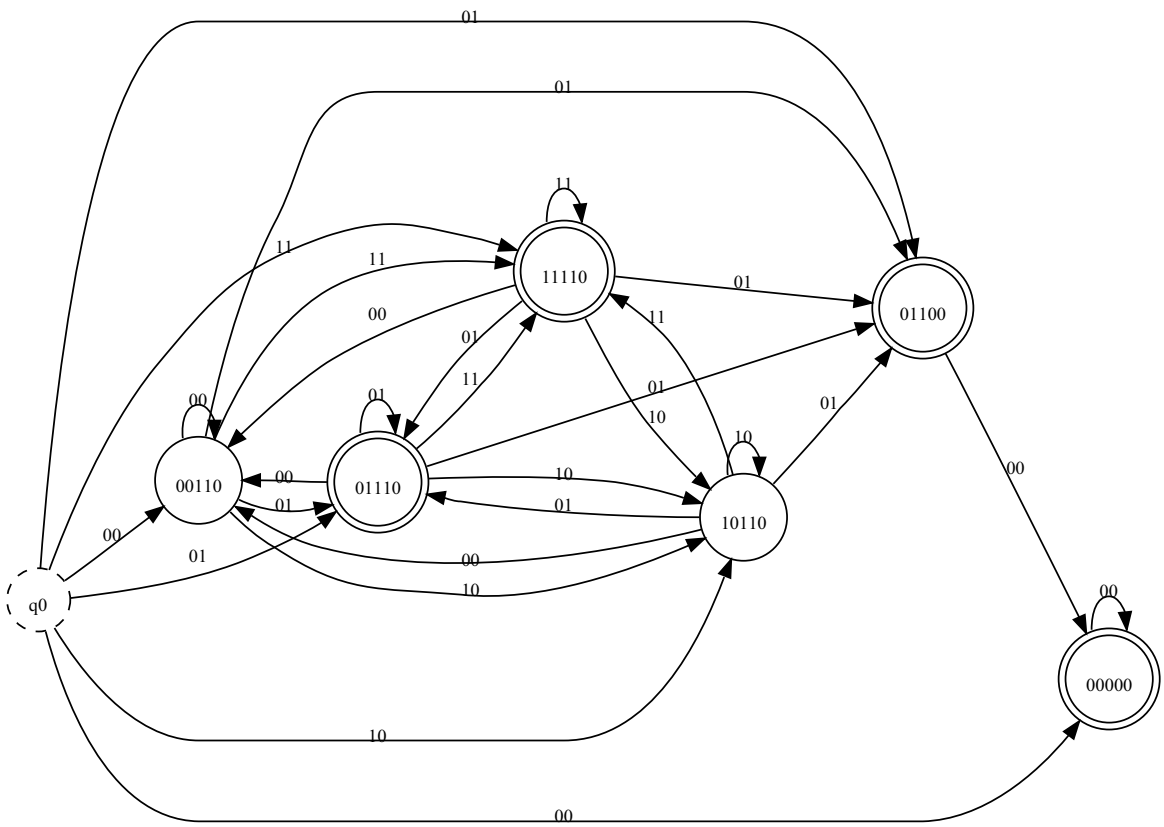

# Soundness of the Improved Transformation

## Theorem

*both transformations yield essentially the same automata; the only difference is that*

- *whenever* $\varphi_i = \varphi_{i_1} \wedge \varphi_{i_2}$ *then the i-th component is missing in the improved transformation; the state without the i-th component of the improved transformation is corresponding to the state* $(\dots, b_{i_1}, \dots, b_{i_2}, \dots, b_i, \dots)$ *where* $b_i = b_{i_1} \wedge b_{i_2}$*; moreover, all other states in the non-improved translation where* $b_i \neq b_{i_1} \wedge b_{i_2}$ *have no outgoing states*
- *a similar property is true for negations*

$\Rightarrow$ *soundness of the non-improved translation implies soundness of the improved one*





# Complexity of LTL Model Checking

LTL model checking: given $TS$ and $\varphi$ check

$$\mathcal{L}(\mathcal{A}_3) = \varnothing$$

where

$$\mathcal{A}_1 = \mathcal{A}_{TS}$$
$$\mathcal{A}_2 = \mathcal{A}_{\neg\varphi}$$
$$\mathcal{A}_3 = \mathcal{A}_{\mathcal{A}_1 \cap \mathcal{A}_2}$$

number of states:

$\mathcal{A}_1 : |TS| + 1$

$\mathcal{A}_2 : 2^{|AP|+|\varphi|} + 1$ where $|\varphi|$ is number of temporal operators in $\varphi$

$\mathcal{A}_3 : (|TS| + 1) \cdot (2^{|AP|+|\varphi|} + 1)$

$\Rightarrow$ total complexity of $\mathcal{O}(|TS| \cdot 2^{|AP|+|\varphi|})$

# Lower bound

**Theorem**

*there exists a family of LTL formulas $\varphi_n$ over $AP = \{\mathsf{a}\}$ with $|\varphi_n| = \mathcal{O}(poly(n))$ such that every NBA $\mathcal{A}_n$ with $\mathcal{L}(\mathcal{A}_n) = \mathcal{L}(\varphi_n)$ has at least $2^n$ states*





# Proof (1)

# Proof (2)





# Is Bad Complexity a Result of Automata Approach? No!

**Theorem (Sistla, Clarke)**

*the LTL model checking problem* $TS \models \varphi$ *is PSPACE-hard*

**Theorem**

*the LTL model checking problem* $TS \models \varphi$ *is PSPACE-complete*

# Summary

- LTL is a logic for specifying the allowed traces of a system; it extends propositional logic by temporal operators like X and U
- LTL model checking can be done by constructing a GNBA and then checking whether this GNBA accepts at least one word, the counterexample
- LTL model checking is PSPACE-complete